Call 1(800)985-6929 for Sales hitachiacdrive.com sales@hitachiacdrive.com

HITACHI INVERTER

L100 SERIES

SERVICE MANUAL

(ADJUSTMENT AND MAINTENANCE)

Model:

European Version
- L100-002NFE to L100-022NFE
- L100-004HFE to L100-075HFE

US Version
- L100-002NFU to L100-022NFU
- L100-004HFU to L100-075HFU
- L100-037LFU
- L100-002MFU to L100-007MFU

Japanese Version
- L100-002LFR to L100-037LFR
- L100-004HFR to L100-075HFR
- L100-002MFR to L100-007MFR

After reading this manual, keep it at hand for future reference

NBS541X

Hitachi, Ltd.
Tokyo Japan

Call 1(800)985-6929 for Sales hitachiacdrive.com sales@hitachiacdrive.com

INDEX

1. Pre-operation Check **1-1**

1-1. Check inverter model and Manufacturing number 1-1

1-2. Check inverter parameter and motor specification 1-2

2. Measurement of The Internal Voltage Supply **2-1**

3. Trouble Shoot **3-1**

3-1. Error messages - Possible Cause and Remedy 3-1

3-2. Analysis of Various Operating Problems That Do Not Trigger an Trip Message 3-6

3-3. How to Initialize the Data (FACTORY SETTING) 3-7

3-4. Error Message Comparison 3-8

3-5. Other Displays 3-9

4. Ambient Condition of the Frequency Inverter (Temperature, Altitude) **4-1**

4-1. Required Derating in case of 50deg., 55 deg. of Ambient Temperature 4-1

4-2. Required derating toward altitude 4-4

5. Level of Each Detection **5-1**

5-1. DC Bus Voltage Detection Characteristics 5-1

5.2. Output Current Detection Characteristics 5-3

5.3. Motor Temperature Detection (PTC) 5-4

5.4. Over Temperature Detection of the Frequency Inverter 5-4

6. Measurement & Replacement of Subassemblies **6-1**

6-1. Insulation Measurement 6-1

6-2. Power Components Measurements 6-1

7. Maintenance and Inspection Procedure **7-1**

7-1. Precautions 7-1

7-2. Measurement of Mains Voltage, Current and Power 7-1

7-3. Maintenance of Parts 7-4

7-4. If you install replacement INV at site 7-4

8. Daily Inspection and Periodical Inspection **8-1**

9. Image block diagram **9-1**

10. Spare parts list **10-1**

10-1. parts list 10-1

10-2. I/O board compatibility 10-16

10-3. O,OI terminal adjustment procedure 10-17

10-4. kW setup procedure 10-18

10-5. I/O board schematic(circuit diagram) 10-19

Revisions

Revision history table

No.	Revision contents	Date of issue	Manual No.

1. Pre-Operation Check

Before starting adjustment and maintenance, be sure to check the following specifications of the inverter and the motor.

1.1 Check Inverter model and Manufacturing number (MFG No).

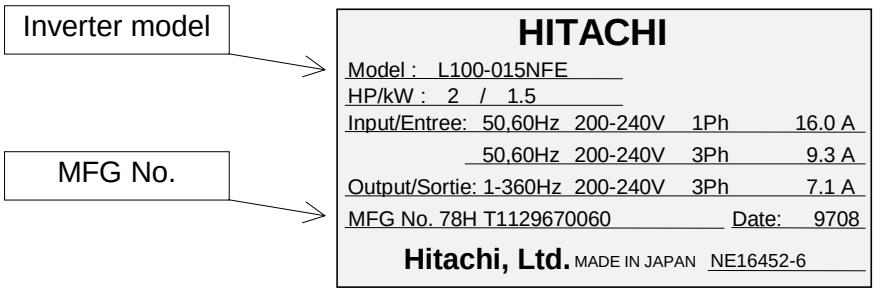

You can find these information from the specification label which attached at the side cover of the unit.

(1) Description of the model name.

L100 015 H F E

- L100 — Series name
- 015 — Applicable motor kW
  - 002 : 0.2kW
  - 004 : 0.4kW
  - 005 : 0.55kW
  - 007 : 0.75kW
  - 011 : 1.1kW
  - 015 : 1.5kW
  - 022 : 2.2kW
  - 030 : 3.0kW
  - 037 : 3.7kW
  - 040 : 4.0kW
  - 055 : 5.5kW
  - 075 : 7.5kW
- H — Input voltage class
  - N: Single/3 phase 200V class
  - L: 3 phase 200V class
  - H: 3 phase 400V class
  - M: Single phase 100V class
- F — Structure type
  - F: With operator
- E — Version number
  - E: European version
  - U: US version
  - R: Japanese version

(2) Description of MFG No.

7 8 H T112967 0060

- 7 — Production year
  (The unit digit of the year of grace. 7:1997, 8:1998, 9:1999, 0:2000)
- 8 — Production Month
  (1 - 9, 0:October, J:November, K:December)
- H — Revision of the inverter
- T112967 — Production code
- 0060 — Unique number

1.2 Check Inverter parameter and motor specification.

[1] Inverter specifications.

(1) Inverter specifications (Monitor mode)

Display order	Function name	Category	Screen display	Initial			Remarks
			Code display	EU	US	JPN	
1	Output frequency monitor	Monitor	d01	-	-	-	
2	Output current monitor	Monitor	d02	-	-	-	
3	Running direction monitor	Monitor	d03	-	-	-	
4	Feedback data of PID control monitor	Monitor	d04	-	-	-	
5	Intelligent input terminal condition monitor	Monitor	d05	-	-	-	
6	Intelligent output terminal condition monitor	Monitor	d06	-	-	-	
7	Output frequency converted value monitor	Monitor	d07	-	-	-	
8	Trip monitor	Monitor	d08	-	-	-	
9	Trip history monitor	Monitor	d09	-	-	-	

(2) Inverter specifications (Basic function mode)

Display order	Function name	Category	Screen display	Initial			Remarks
			Code display	EU	US	JPN	
1	Output frequency setting	set	F01	0.0	0.0	0.0	
2	Acceleration time 1	set	F02	10	10	10	
3	Deceleration time 1	set	F03	10	10	10	
4	Running direction setting	set	F04	00	00	00	
5	Extended function A group setting	set	A--				
6	Extended function B group setting	set	B--				
7	Extended function C group setting	set	C--				

(3) Inverter specifications (Extended function mode : A group)

Display order	Function name	Category	Screen display	Initial			Remarks
			Code display	EU	US	JPN	
1	Frequency destination	set	**A01**	01	01	00	
2	Running command destination	set	**A02**	01	01	02	
3	Base frequency	set	**A03**	50	60	60	
4	Maximum frequency	set	**A04**	50	60	60	
5	External frequency setting start	set	**A11**	0	0	0	
6	External frequency setting end	set	**A12**	0	0	0	
7	External frequency setting start rate	set	**A13**	0	0	0	
8	External frequency setting end rate	set	**A14**	100	100	100	
9	External frequency start pattern	set	**A15**	01	01	01	
10	Time constant of the filter of analog input	set	**A16**	8	8	8	
11	Multi-speed 1 to 16	set	**A20 - A35**	0	0	Note 1	
12	Jogging frequency	set	**A38**	1.0	1.0	1.0	
13	Stop mode of jogging	set	**A39**	00	00	00	
14	Torque boost mode	set	**A41**	00	00	00	
15	Level of manual torque boost	set	**A42**	11	11	11	
16	Manual torque boost frequency	set	**A43**	10.0	10.0	10.0	
17	V/f characteristics	set	**A44**	00	00	00	
18	V-gain	set	**A45**	100	100	100	
19	Selection of DC braking	set	**A51**	00	00	00	
20	DC braking frequency	set	**A52**	0.5	0.5	0.5	
21	DC braking waiting time	set	**A53**	0.0	0.0	0.0	
22	DC braking force	set	**A54**	0	0	0	
23	DC braking time	set	**A55**	0.0	0.0	0.0	
24	Frequency upper limiter	set	**A61**	0.0	0.0	0.0	
25	Frequency lower limiter	set	**A62**	0.0	0.0	0.0	
26	Jump frequency 1-3	set	**A63, A65, A67**	0.0	0.0	0.0	
27	Jump frequency width 1-3	set	**A64, A66, A68**	0.5	0.5	0.5	
28	Selection of PID control	set	**A71**	00	00	00	
29	P gain	set	**A72**	1.0	1.0	1.0	
30	I gain	set	**A73**	1.0	1.0	1.0	
31	D gain	set	**A74**	0.0	0.0	0.0	
32	Scale conversion of PID control	set	**A75**	1.0	1.0	1.0	
33	Feedback destination	set	**A76**	00	00	00	
34	Selection of AVR function	set	**A81**	02	02	02	
35	AVR voltage	set	**A82**	230/400	230/460	200/400	
36	Second acceleration time	set	**A92**	15.0	15.0	15.0	
37	Second deceleration time	set	**A93**	15.0	15.0	15.0	
38	Method to use 2nd acceleration / deceleration (Acc2 / Dec2)	set	**A94**	00	00	00	
39	Acc1 to Acc2 changing frequency	set	**A95**	0.0	0.0	0.0	
40	Dec1 to Dec2 changing frequency	set	**A96**	0.0	0.0	0.0	
41	Acceleration characteristic	set	**A97**	00	00	00	
42	Deceleration characteristic	set	**A98**	00	00	00	

Note 1 A20;0, A21;5, A22;10, A23;15,A24;20, A25;30, A26;40, A27;50, A28; 60,A29--A35;0

(4) Inverter specifications (Extended function mode : B group)

Display order	Function name	Category	Screen display	Initial			Remarks
			Code display	EU	US	JPN	
1	Selection of restart mode	set	b01	00	00	00	
2	Allowable UV time	set	b02	1.0	1.0	1.0	
3	Retry waiting time	set	b03	1.0	1.0	1.0	
5	Electronic thermal level	set	b12	note	note	note	Rated current of each inverter
6	Electronic thermal characteristics	set	b13	01	01	00	
7	Overload restriction operation mode	set	b21	01	01	01	
8	Overload restriction level	set	b22	note	note	note	Rated current * 1.25 for each inverter
9	Deceleration rate while overload restriction	set	b23	1.0	1.0	1.0	
10	Selection of software lock	set	b31	01	01	01	
11	Reactive current setting	set	B32	note	note	Note	Rated current *0.58 for each inverter
13	Analog meter adjustment	set	b81	80	80	80	
14	Start frequency adjustment	set	b82	0.5	0.5	0.5	
15	Carrier frequency	set	b83	5	5	12	
16	Data initialization or Trip history clear	set	b84	00	00	00	
17	Initialization mode	set	b85	01	02	00	
18	Frequency converting value	set	b86	1.0	1.0	1.0	
19	STOP key condition	set	b87	00	00	00	
20	Restart mode after FRS invalid	set	b88	00	00	00	
21	Monitor contents for OPE-J	set	b89	01	01	01	

(5) Inverter specifications (Extended function mode : C group)

Display order	Function name	Category	Screen display	Initial			Remarks
			Code display	EU	US	JPN	
1	Input terminal 1 assign	set	C01	00	00	00	
2	Input terminal 2 assign	set	C02	01	01	01	
3	Input terminal 3 assign	set	C03	02	16	02	
4	Input terminal 4 assign	set	C04	03	13	03	
5	Input terminal 5 assign	set	C05	18	18	18	
6	Input terminal 1 condition	set	C11	00	00	00	
7	Input terminal 2 condition	set	C12	00	00	00	
8	Input terminal 3 condition	set	C13	00	00	00	
9	Input terminal 4 condition	set	C14	00	01	00	
10	Input terminal 5 condition	set	C15	00	00	00	
11	Output terminal 11 assign	set	C21	01	01	01	
12	Output terminal 12 assign	set	C22	00	00	00	
13	FM terminal condition	set	C23	00	00	00	
14	Output terminal 11 condition	set	C31	00	00	00	
15	Output terminal 12 condition	set	C32	00	00	00	
16	AL output terminal condition	set	C33	01	01	01	
17	Level of overload signal	set	C41	note	note	note	Rated current of each inverter
18	Arrival frequency while acceleration	set	C42	0.0	0.0	0.0	
19	Arrival frequency while deceleration	set	C43	0.0	0.0	0.0	
20	Level of deviation signal under PID control	set	C44	3.0	3.0	3.0	

[2] Motor specifications.

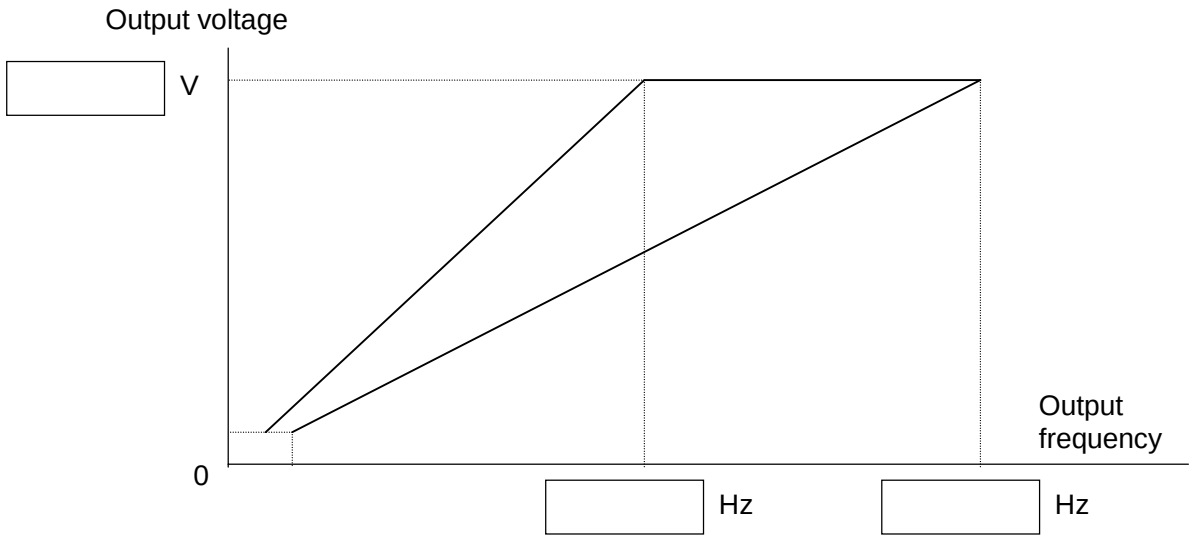

Motor MFG number					
Motor output		kW	Rated current		Amps
Motor poles		p	Rated voltage		V
Motor rated rpm		rpm	Rated frequency		Hz
			Starting current		Amps

[3] Load conditions

Equipment name					
Torque characteristics			Acceleration time		sec
Required torque		Nm	Deceleration time		sec
Load inertia (J)		kgm^2	Variable speed range		
				Hz to	Hz

2. Measurement of the Internal Voltage Supply

There are PV5L, PV24L and NV12L internal DC voltage supplies. These supplies are isolated from the main high voltage portion. And it is not possible to measure DC voltages at the non isolated portion. Please make measurements for above mentioned voltages for the isolated portion.

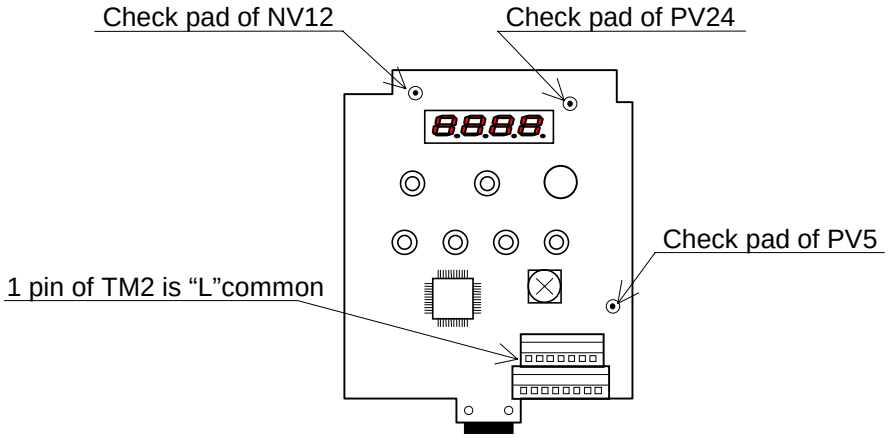

PV5L supply voltage

Supplies 5V for I/O board.
Nominal voltage : min. 4.90Vdc to max. 5.20Vdc
Check PV5(address 1C) <- L

PV24L supply voltage

Supplies 24V to interface voltage supply, which is supplied to input terminals.
Nominal voltage : min. 21.60Vdc to max. 26.40Vdc
Check PV24(address 1A) <- L

NV12L supply voltage

Supplies -12Vdc to remote operator (DOP/DRW’s yellow backlight).
Nominal voltage : max. -10.80Vdc to min. -17.5Vdc
Check NV12(address 3A) <- L

“H” terminal voltage

Suppiles 10V to “H” terminal
Nominal voltage : min 9.5Vdc to max 11.5Vdc
Check “H” <-> “L” with VR (1kohm)

“Potentiometer function on the front case

Set “A01” :”00”
Monitor “F01” display 0 <-> 50(60) with clockwise and anti clockwise.

Cooling FAN voltage (PV24N)

Supplies 24V to cooling FAN .
Nominal voltage min 19.9Vdc to max 27.2Vdc.
Check Red wire <- Black wire with the FAN.
Check the FAN working, check the air direction (from down to top)

3. Trouble Shoot

3-1. Error Messages - Possible Cause and Remedy:

(1) Overcurrent 1 (E 01, E 02, E 03, E 04)

Phenomena: Overcurrent for each condition.
- E 01 : Overcurrent during constant speed operation.
- E 02 : Overcurrent during deceleration.
- E 03 : Overcurrent during acceleration.
- E 04 : Overcurrent at other condition than above mentioned. (such as injection brake)

Cause: Load changed rapidly.
Remedy: Eliminate rapid changed in load.

Cause: Sort circuit or earth contact (ground fault) in the motor or the motor cable.
Remedy: Check with Megger. If the motor cable is disconnected from the inverter, the overcurrent should not be detected anymore.

Cause: A single-phase power failure (fuse, wire, ...) can cause a shutdown in certain underload situations..
Remedy: Check all these mains phases and the mains fuses, preferably by comparison of the three (two in case of single phase inverter) mains currents in a steady operating state.

Cause: The motor is switched with a motor contactor during frequency inverter operation.
Remedy: Switching over the motor is inhibited.

Cause: Defect in the power component.
Remedy: Check the IGBT portion of ISPM.

Cause: Rapid acceleration or deceleration.
Remedy: Set suitable acceleration or deceleration time.

Cause: Starting frequency is too high.
Remedy: Set starting frequency as low as possible.

Way to Reset: A

(2) Overload (E 05)

Phenomena: Overload of the inverter.

This error can be reset 10 seconds after the E05 came out.

Cause: Motor load is heavy.
Remedy: Reduce the load and/or increase thermal level and/or use bigger capacity of frequency inverter.

Cause: V-Boost value is high.
Remedy: Reduce V-Boost value or increase thermal level and/or use bigger capacity of frequency inverter.

Cause: Set wrong value for electronic thermal level [b12] and/or electronic thermal characteristic [b13].
Remedy: Set suitable value.

Cause: Set wrong value for the reactive current of the motor.
Remedy: Set suitable value. Reactive current value which should be input by function mode is a value measured at 50Hz (60Hz) without load.

Way to Reset: A

(3) Overvoltage (E 07)

Phenomena: Overvoltage at DC bus line of the frequency inverter.

Cause: Mains voltage too high, mains voltage fluctuation or rapid mains voltage return (choke energy leads to voltage increase).
Remedy: Make sure that mains voltage is within tolerance limits.

Cause: In case L100 is used in combination with a regenerative braking unit but the regenerative braking unit does not function.
Remedy: Replace regenerative braking unit.

Cause: In case L100 is used in combination with a raking resistor but the braking resistor cannot absorb the regenerative energy.
Remedy: Re-calculate and use suitable braking resistor.

Cause: Deceleration time is too short.
Remedy: Make deceleration time longer, use braking unit (resistor), use bigger capacity of frequency inverter.

Way to Reset: A

(4) Undervoltage (E 09)

Phenomena: Undervoltage at DC bus line of the frequency inverter.

Cause: The mains voltage is not available or not within the tolerance limits.
Remedy: Check all 3 (or 2) mains power supply voltage that it is within its specification.

Cause: Thyristor for smooth charging is defect and DC bus voltage drops while operation due to current flows through smooth charging resistor.

Remedy: Change ISPM.

Cause: Period of instantaneous power failure is longer than the set value [b02], or DC bus voltage go down to its detecting level while instantaneous power failure.
Remedy: Get rid of the instantaneous power failure, evaluate the power supply system, set bigger value for [b02].

Cause: One of the AC voltage is missing (applied only for 3 phase INV)
Remedy: Check AC line voltage , check the fuses.

Way to Reset: A

(5) EEPROM error (E 08)

Phenomena: Abnormal situation occurs at the memory portion of the frequency inverter due to incoming noise etc..

Cause: Influenced by Electrical Magnetic Interference.
Remedy: Keep such noise source away from the frequency inverter.

Cause: Ambient temperature is too high.
Remedy: Take countermeasure against high ambient temperature.

Cause: Re-power up the frequency inverter short time after power off. It is necessary to keep several seconds after power off to memorize the current data at EEPROM. If this time is too short, this storage performance cannot be done and leads to EEPROM error.
Remedy: Keep certain time between power off and re-power up.

Cause: You didn't wait 6 seconds or more at FACTORY SETTING.
Remedy: Please try FACTORY SETTING again.

Cause: RS terminal was keeping "ON" at power off. (If RS is on, INV can not write the correct data to EPROM at power off, next power on E08 will come out.)
Remedy: Please don't use "RS" terminal "ON" at power off.

Cause: EEPROM is defect.
Remedy: Change unit.
After you reset the INV, please make sure the parameters especially maximum freq. / Acc /Dec time / Low limit freq. to prevent any damage.

Way to Reset: A or Power off

(6) CPU error (E 11, E 22)

Phenomena: Abnormal situation or malfunction of micro processor inside frequency inverter.
E 11 : CPU error from MCU inside core.
E 22 : CPU error from MCU on I/O board.

E22 is produced by MCU on I/O board and the causes is communication error between ISPM & MCU on I/O board.

Cause: Cable (between ISPM and I/O board)was cut. (E22)
Remedy: Replace the cable.
Cause: Dusts on the pins of CN2 on I/O board. (E22)
Remedy: Remove the dusts.

Cause: Influenced by Electrical Magnetic Interference.
Remedy: Keep such noise source away from the frequency inverter.

Cause: Ambient temperature is too high.
Remedy: Take countermeasure against high ambient temperature.

Cause: Component itself is defect.
Remedy: Replace ISPM (in case of E 11) or I/O board board (in case of E 12).

(7) External Trip (E 12)

Phenomena: Trip due to have inputted an external signal to “EXT” input terminal of the frequency inverter.

Cause: Faulty external device or equipment gives frequency inverter a trip requirement when external trip function (EXT) is selected.
Remedy: Evaluate external device or equipment which is connected to frequency inverter.

Way to Reset: A

(8) USP error (E 13)

Phenomena: Unexpected Start Protection. This error can occur when “USP” function is selected.

Cause: Frequency inverter trips when it is powered up with RUN command is given.
Remedy: Disable RUN command when power up the frequency inverter. Or disable USP function if possible to the system.

Way to Reset: A or set RUN command off (stop)

(9) Ground fault error (E 14)

Phenomena: Earth contact in the motor or the motor cable or in the IGBT. Frequency inverter detects this earth contact only at power up.

To resolve the causes , please power off and disconnect the motor wire at INV (UVW)terminal.

Cause: Earth contact in the motor or the motor cable.
Remedy: Check the impedance between output portion(wire and motor) and earth.

Cause: Detection circuit/IGBT of the inverter is defect. If the motor and the motor cable is disconnected from the frequency inverter, the ground fault should not be detected anymore.
Remedy: Please disconnect the motor and the motor cable.
If E14 comes out at power on,please replace the unit.

Way to Reset: Don’t reset.

(10) Over voltage at source (E 15)

Phenomena: High voltage at power source line. Frequency inverter cannot protect source overvoltage. If it is too high, frequency inverter will be damaged.

Cause: Source voltage is too high.
Remedy: Check the source voltage continously.
Insert AC reactor at source lines.

Way to Reset: A

(11) Over temperature (E 21)

Phenomena: Temperature sensor which located close to IGBT inside ISPM shows a too high temperature.

Cause: Ventilator blocked. (for models which has ventilator.)
Remedy: Check ventilator

Cause: The frequency inverter does not get enough cooling air.
Remedy: Check cabinet ventilation, air filters, and ventilation openings in the cabinet.

Way to Reset: A

(12) PTC error (E 35)

Phenomena: Resistance of motor thermistor is high. This error can occur when you select “PTC” function.

Cause: Too much load of the motor.
Remedy: Reduce the load, use bigger motor.

Cause: Motor thermistor is not connected while PTC function is selected.
Remedy: Disable PTC function when it is not used.

Cause: Characteristics of the motor thermistor is not suitable. Frequency inverter gives PTC error when the resistance value becomes more than 3k ohm +-10%.
Remedy: Use motor which has suitable thermistor for the inverter.
Or change thermistor characteristics of the thermistor by debug mode.

Way to Reset: A

Explanation of the way to reset.

A : Make close the terminals between RS and P24 (CM1 only for Japanese version) on the I/O board, or press “STOP/RESET” key of the operator.

3-2. Analysis of Various Operating Problems That Do Not Trigger an Trip message.

Problem	Possible cause	Remedy
The motor does not start	Mode of frequency command [A01] and/or Run command [A02] is not proper	Check each mode again
	Incorrect power supply condition	Check that the power supply is within its specification
	Inverter is in trip mode	Get rid of the trip cause
	0 Hz of Multi-stage speed is given	
	FRS and/or RS is remaining	Make FRS and RS invalid
	0 Hz command is given	
	Each phase to phase voltage does not balance. (out of +-3%)	Replace the unit
	Load is too heavy	Decrease the load or use bigger capacity of inverter and motor
	If you use DOP or DRW, DIP switch selection of the operator is incorrect.	Set as follows 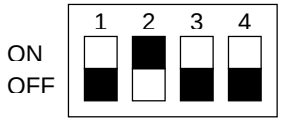 Same as J300, J100,SJ100
	Inverter Failure	Replace the unit
Rotation direction is opposite	Wiring of the motor cable is incorrect (U, V, W)	Check the wiring of the motor cable
	Setting of [F04] is incorrect	Check the setting
Motor does not increase speed	Motor load is too heavy (Overload limitation)	Remove or decrease the motor load
	External frequency set (VR) is out of order	replace VR
	Frequency limiter [A61] is set	Eliminate frequency limiter
	Acceleration time is too short	Set longer acceleration time
The inverter cannot be programmed	Software lock is selected [b31]	Make software lock invalid
	RS or FRS command is given	Make them invalid
	Multi stage speed command is given	Make inverter in stop mode
	Loose connection of DOP/DRW	Connect DOP/DRW properly
	Inverter is in trip mode	Reset the inverter
Unstable rotation of the motor	Motor load is changing heavily	Reduce the motor load changing or use bigger capacity of inverter and motor
	Source voltage is changing	Reduce the changing
	Mechanical resonance	Change output frequency
Data is not changed	Forgot to press [STR] key	Press [STR] key after changing data
	Turn main power off within 6 seconds after pressing [STR] key	Make sure to wait at least 6 seconds after [STR] key is pressed
Cannot change data by Copy Unit	Turn power off within 6 seconds after started copying	Make sure to wait at least 6 seconds

3-3. How to Initialize the Data (FACTORY SETTING)

1. Select the mode of initialization data to which you want to initialize by [b85].
   Japanese version data -----> Set “00” and store
   EU version data -----> Set “01” and store
   US version data -----> Set “02” and store

2. Set [b84] to “01” to initialize and store.

3. Keep pressing FUNC. 1 2 keys at the same time.

(If front case is not closed by the screw, dittcult to press 3keys.)

4. Additionally press STOP RESET key and release STOP RESET key approximately after one second.

5. Keep pressing FUNC. 1 2 keys until “d 00” will blink. (Approximately 2 seconds.)

6. Release all the keys after starts blinking.

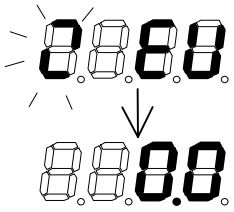

Initialization end

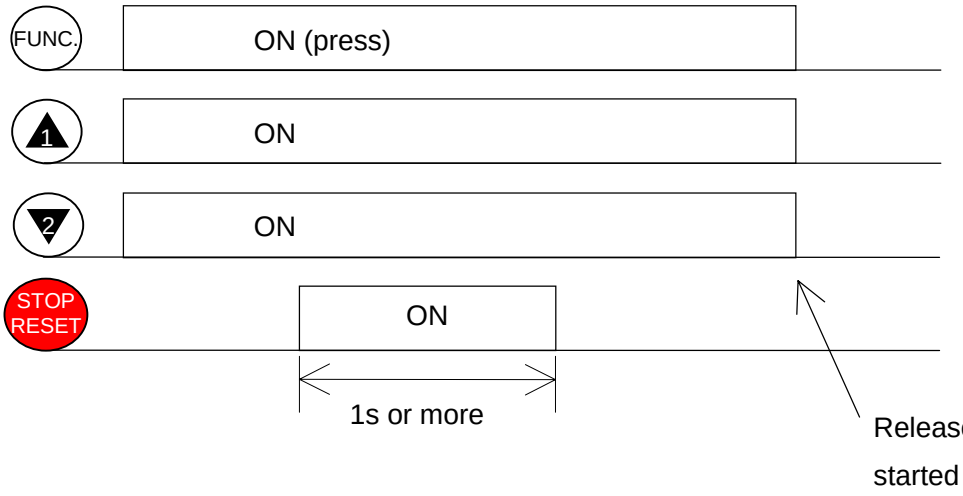

[c95] ; INV kW code
01;0.2kW , 02;0.4kW , 03;0.75kW (0.5 kW) , 04;1.5kW , 05;2.2kW ,
06;3.7kW(4.0kW) , 07;5.5kW, 08;7.5kW

3-4. Error Message comparison

Digital Panel	DOP / DRW	Contents
E 01	OC. Drive	Over current while constant speed driving
E 02	OC. Decel	Over current while deceleration
E 03	OC. Accel	Over current while acceleration
E 04	Over. C	Over current at other condition than above(such as 0Hz,injection brake)
E 05	Over. L	Over load (Possible to reset after 10 seconds has passed)
E 07	Over. V	Over voltage (DC bus)
E 08	EEPROM	EEPROM error (Check the parameters again if this error occurred)
E 09	Under. V	Under voltage (DC bus)
E 11	CPU 1	CPU error
E 22	CPU 2	
E 12	External	External error
E 13	USP	USP error
E 14	GND Flt	Ground fault at power-on
E 15	OV. SRC	Over voltage at source (DC bus)
E 21	OH FIN	Over temperature
E 35	PTC	PTC error

3-5. Other Displays

Digital Panel	Contents
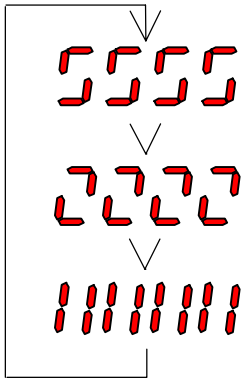	- Reset terminal is ON - During initialization (such as at power-on)
- - -	- Voltage is within UV level - Power OFF
0000	- During retry mode
S EU	- During initialization as EU settings
SUSA	- During initialization as US settings
S JP	- During initialization as Japanese settings
S HC	- Erasing trip histories
COPY	- Copying with DRW,DRW-2
- - -	- When there is no data (i.e. feedback data of PID, etc.)

4. Ambient Condition of the Frequency Inverter

4-1. Required Derating in case of 50deg, 55deg of Ambient Temperature

Inverter ratings can be influenced by many factors. You can find in this section, the relation between ambient temperature and output current (%) and carrier frequency.

Standard ratings in 40 degree C

Top cover removed condition in 50 degree C max.

Top cover removed condition in 55 degree C max.

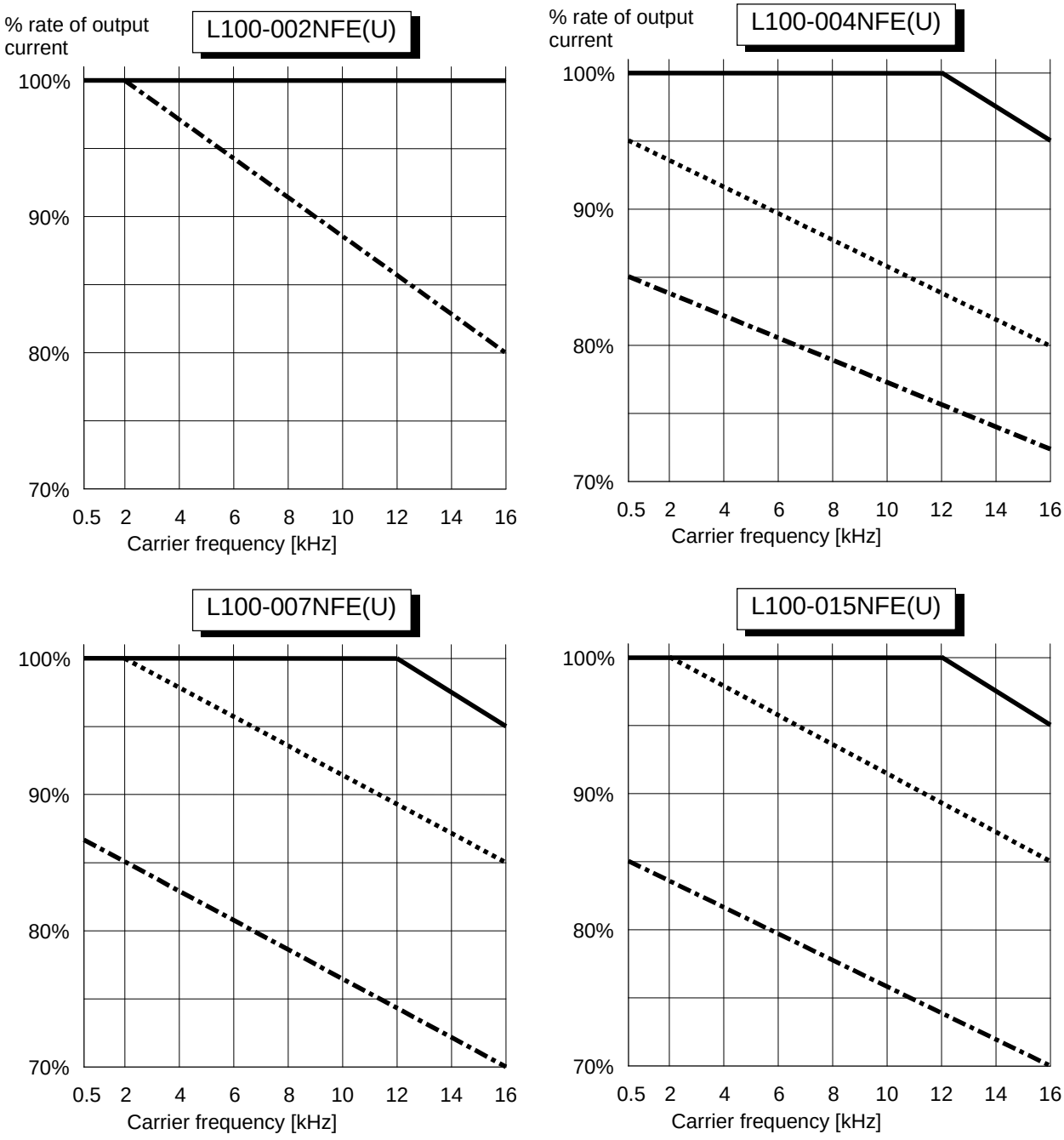

L100-022NFE(U)

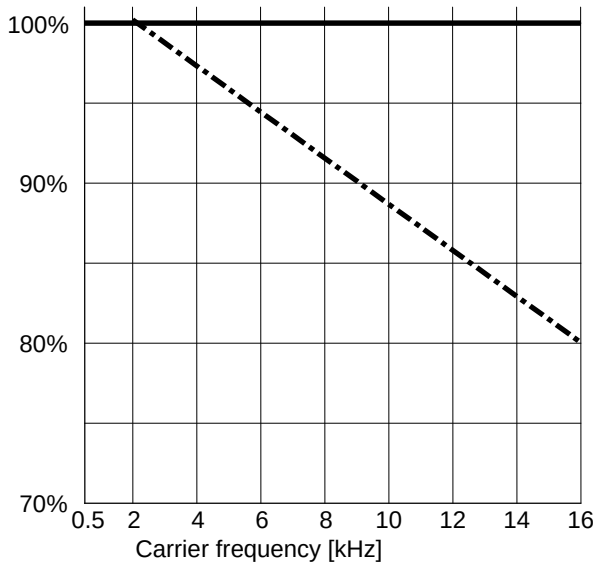

L100-037LF(U)

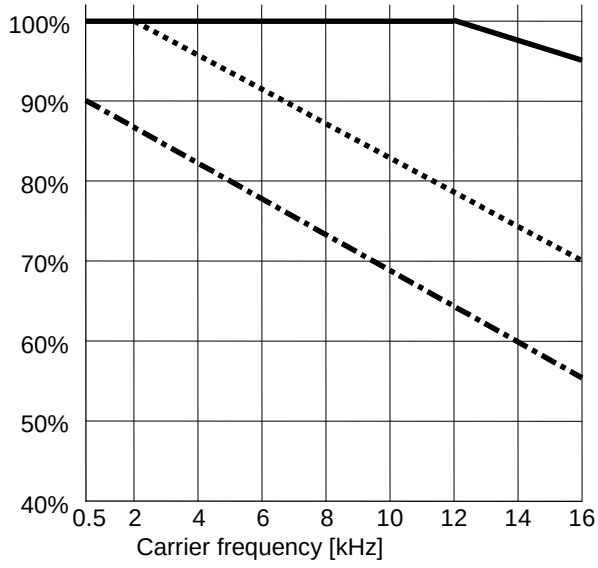

L100-004HFE(U)

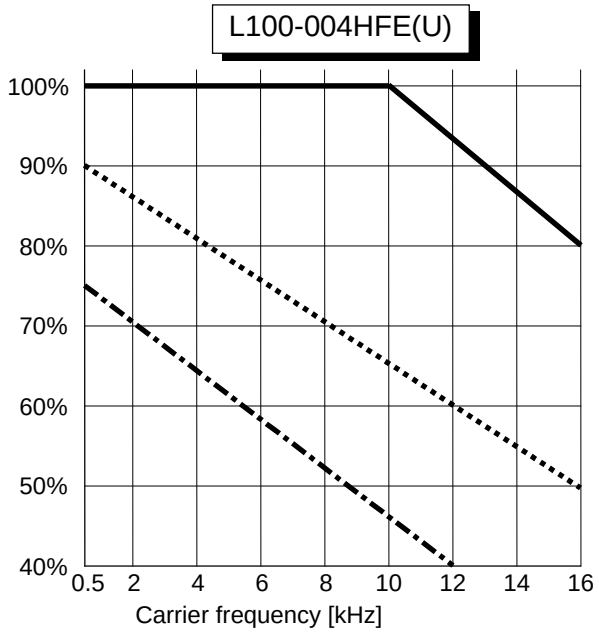

L100-007HFE(U)

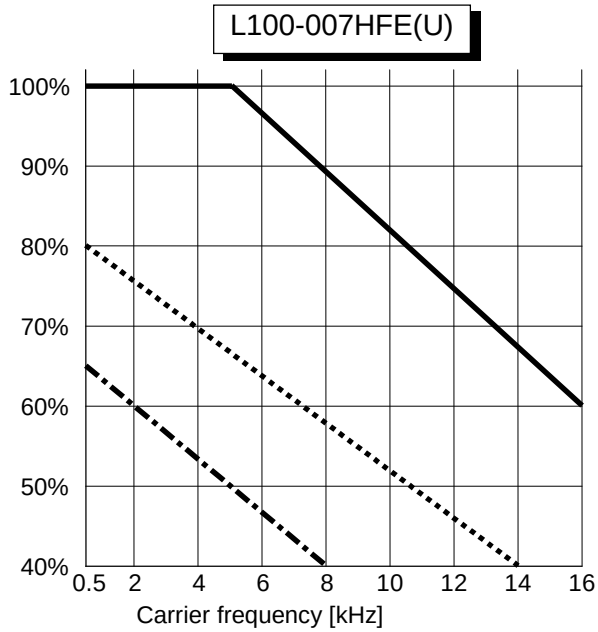

L100-015HFE(U)

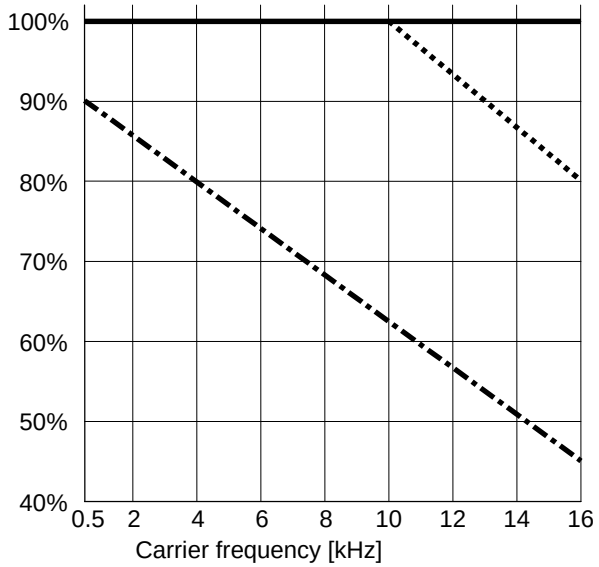

L100-022HFE(U)

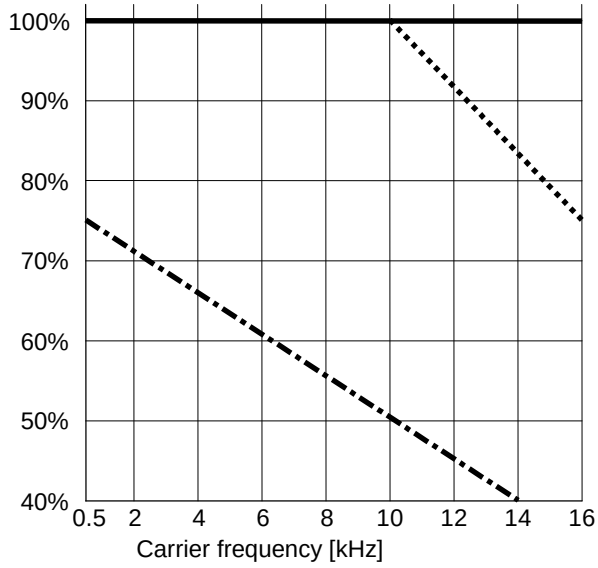

L100-055LFU

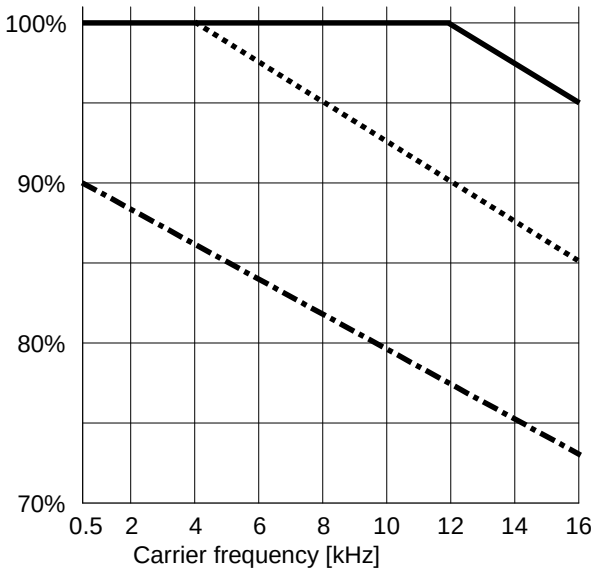

L100-075LFU

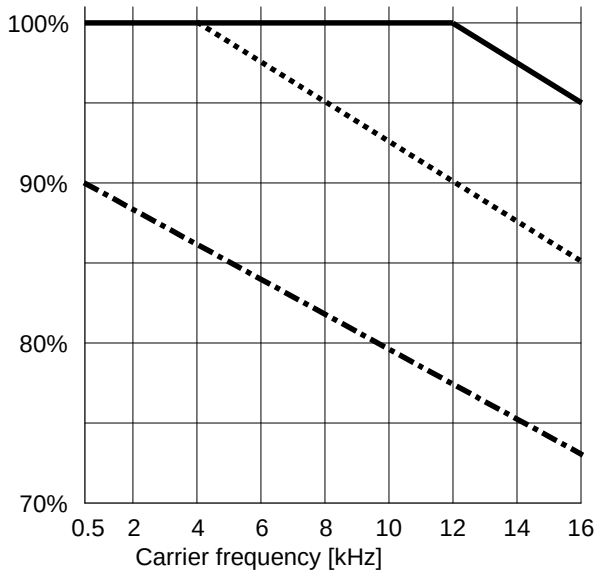

L100-055HFE(U)

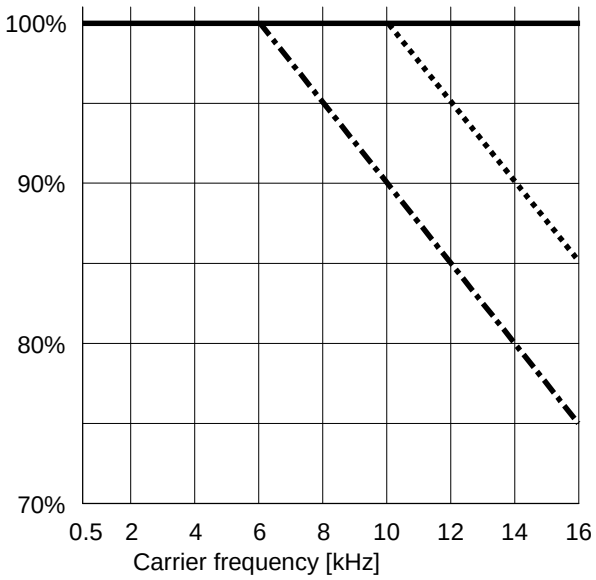

L100-075HFE(U)

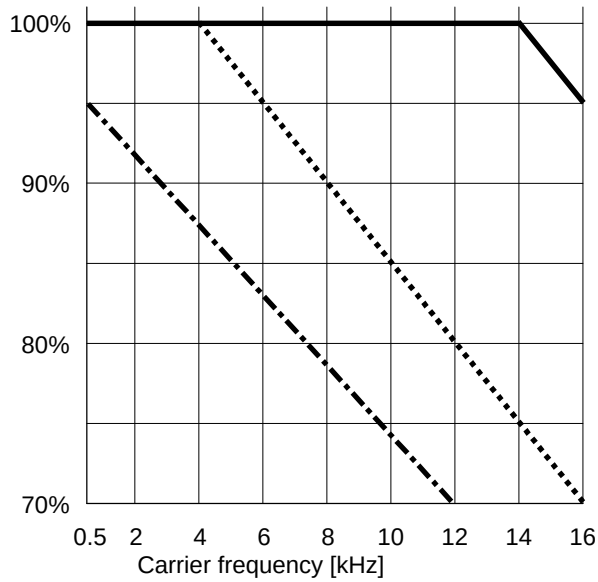

L100-002MFU
L100-004MFU

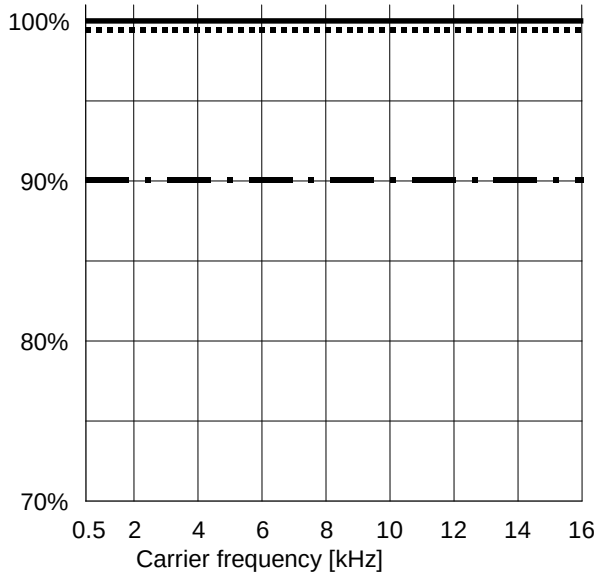

L100-007MFU

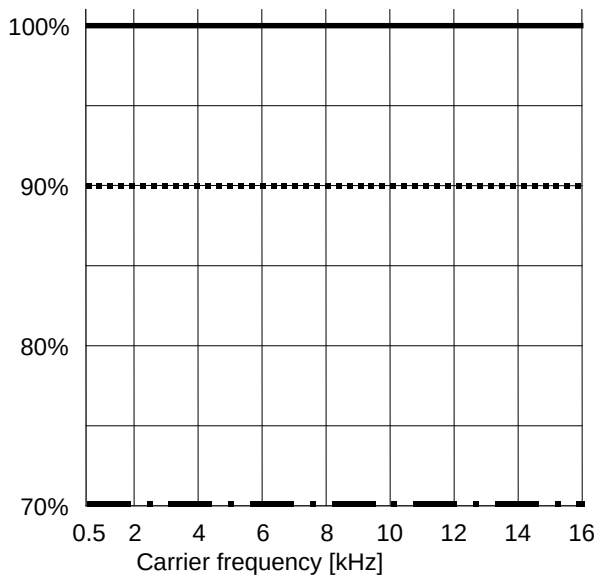

4-2. Required derating toward altitude

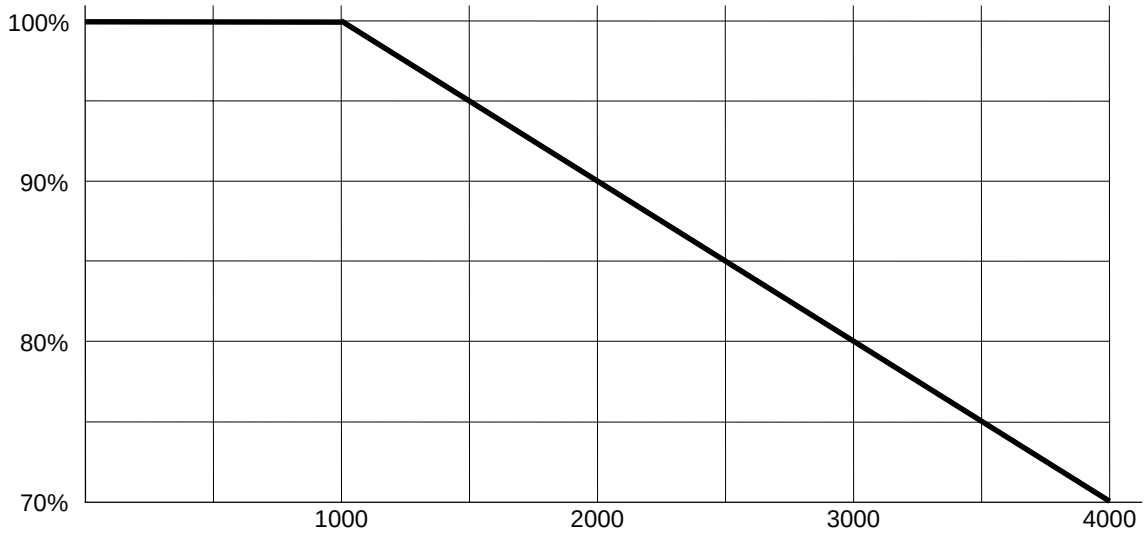

Example of calculation

L100-007NFE (4 Amps) is installed at 2000m of altitude and 16kHz of carrier frequency.
Required derating of output frequency of this case will be as follows.

4 [Amps] * 90% * 95% = 3.4 [Amps]

Carrier frequency derating

Altitude frequency derating

<Note 1> When the top cover is removed for the high ambient temperature, inverter should be installed in an enclosure of IP 4* (see EN60529) to comply with LVD directive.

<Note 2> If class B of EMC directive is required, carrier frequency must be set to 5kHz.

5. Level of Each Detection

5-1. DC Bus Voltage Detection Characteristics

Frequency inverter has several detection characteristics for DC bus voltage as followings.

[1] 200V class

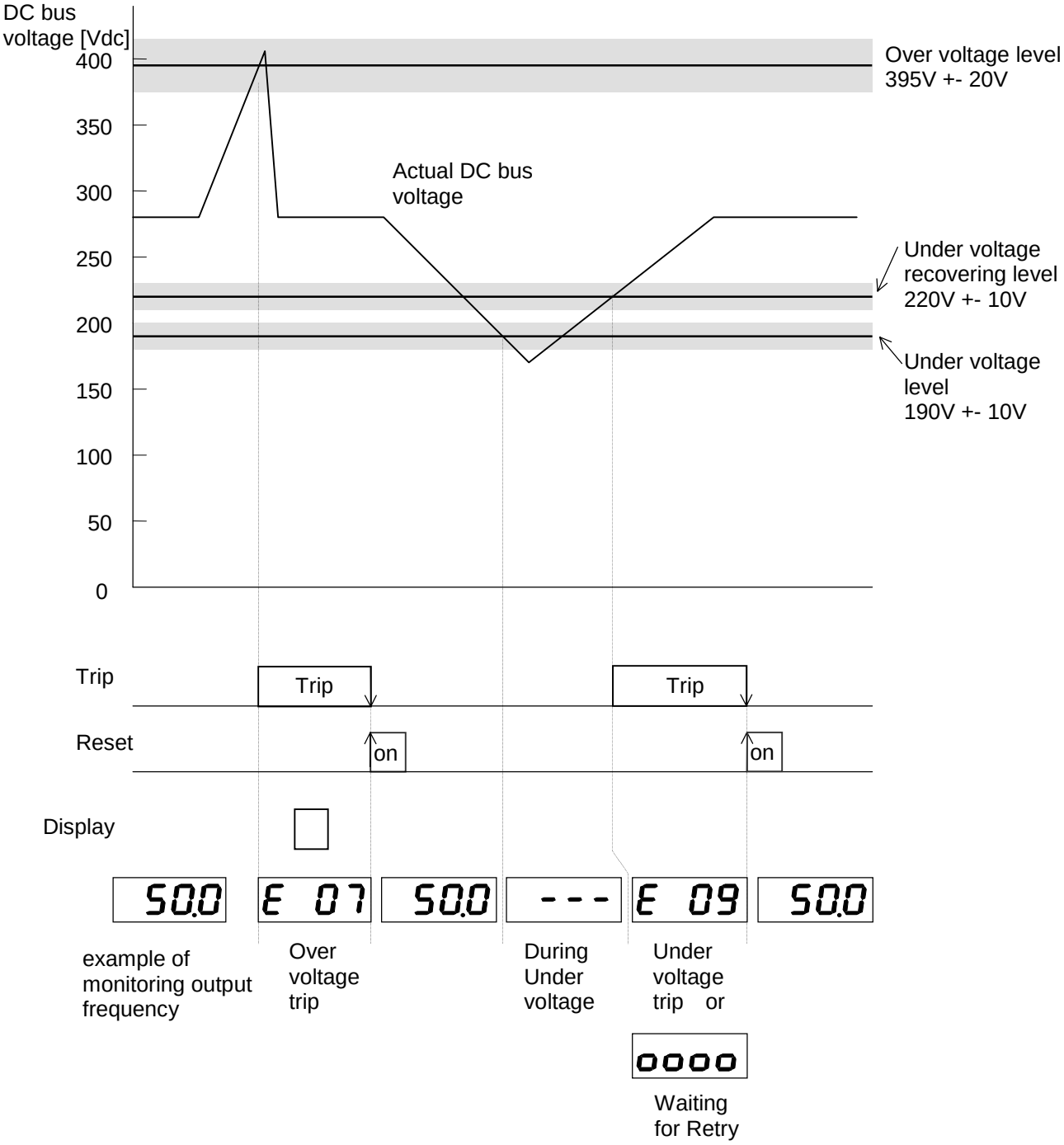

[2] 400V class

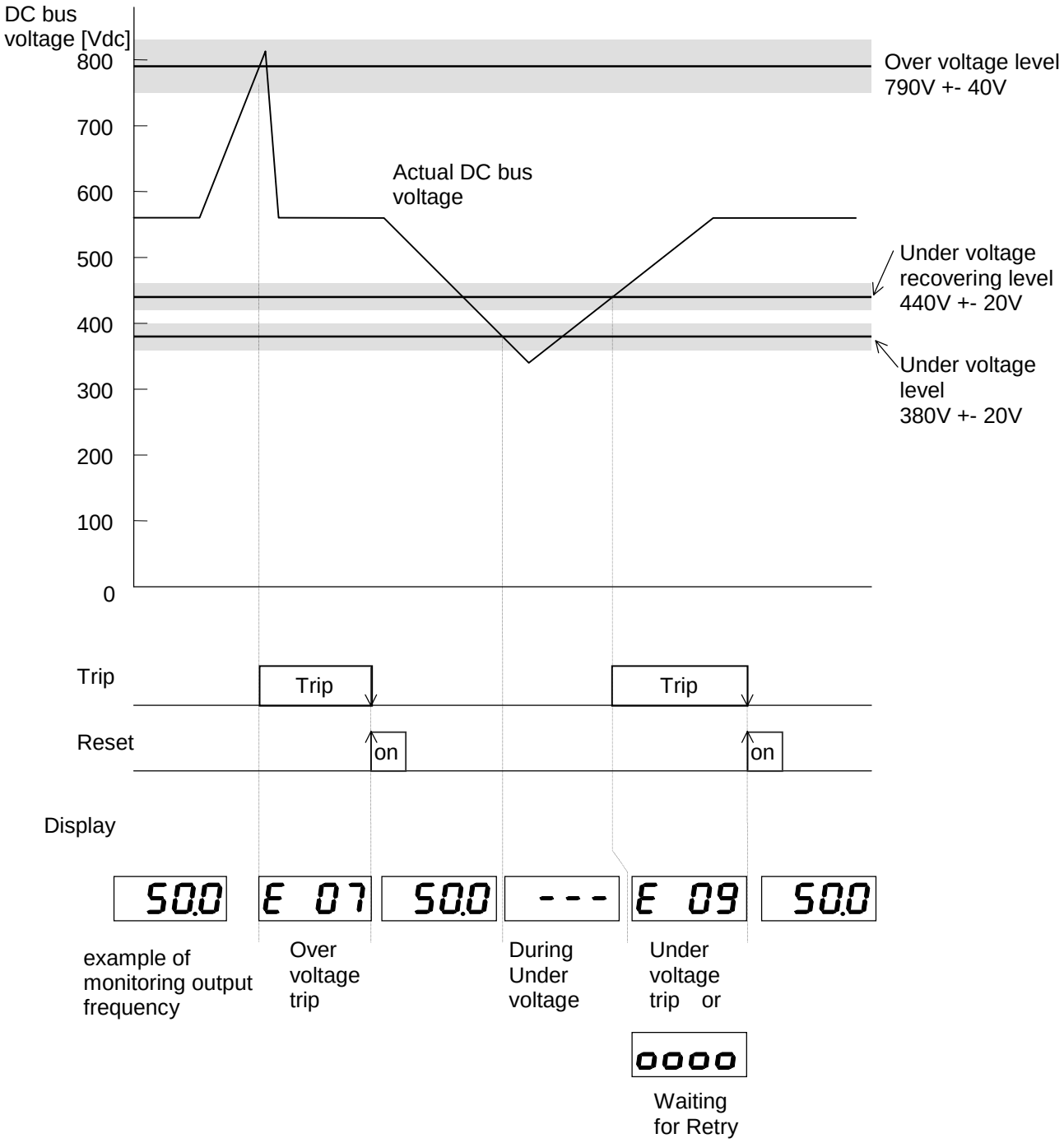
DC bus voltage [Vdc]
800
700
600
500
400
300
200
100
0
Over voltage level 790V +- 40V
Actual DC bus voltage
Under voltage recovering level 440V +- 20V
Under voltage level 380V +- 20V
Trip
Trip
Trip
Reset
on
on
Display
50.0
E 07
50.0

E 09
50.0
example of monitoring output frequency
Over voltage trip
During Under voltage
Under voltage trip or
0000
Waiting for Retry

5-2. Output Current Detection Characteristics

Frequency inverter has several detection characteristics for output current to protect IGBT from break down, or to protect motor from over heat.

[1] Over current

Frequency inverter shuts off the output instantaneously when output current exceeds to 200% of its rated current.

e.g. Over current protection level of L100-015NFE (7.1 Amps of rated current) is
7.1 [Arms] * 200% = 14.2 [Arms] = 20.1 [A peak]

[2] Over load (Electronic thermal protection)

Frequency inverter shuts off the output when integration value of output current and time exceeds specific value.

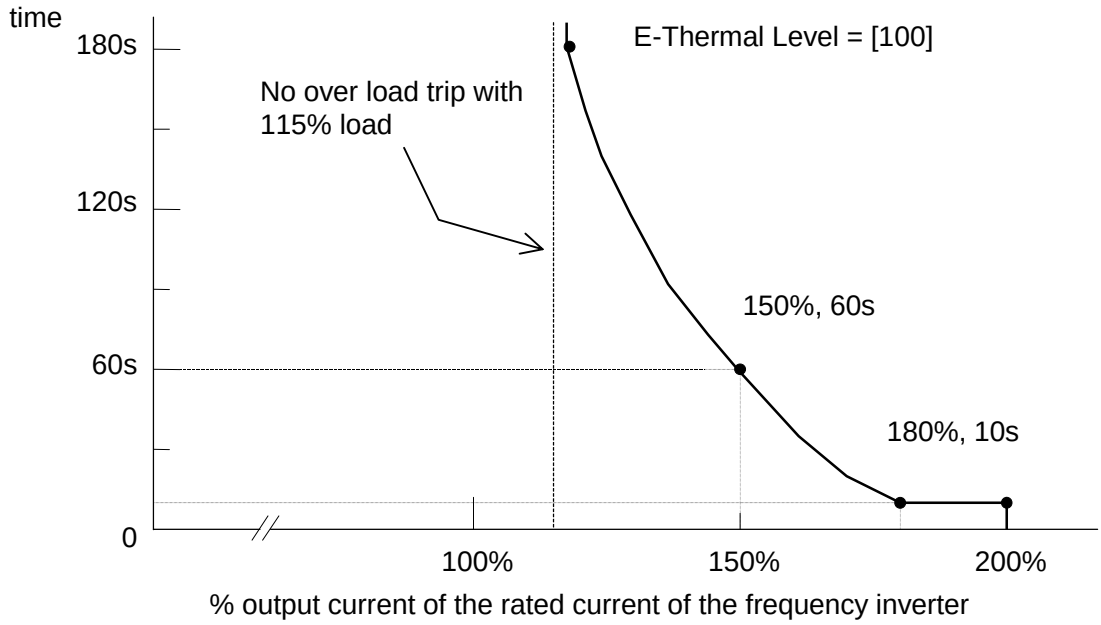

This Electronic thermal level can be changed from 50% to 120%. (Initial setting is 100%.)

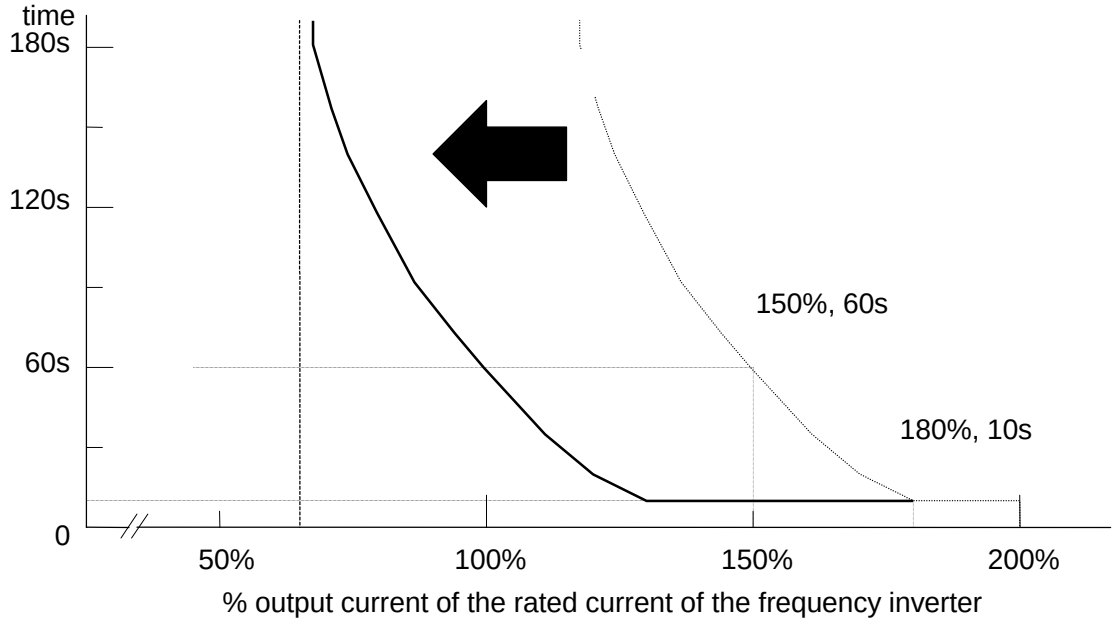

5-3. Motor Temperature Detection (PTC)

Frequency inverter has a motor temperature sensor input (PTC input : PTC resistor).

When the resistance value is more than 3k ohm +-10%, the frequency inverter trips with “E35”.

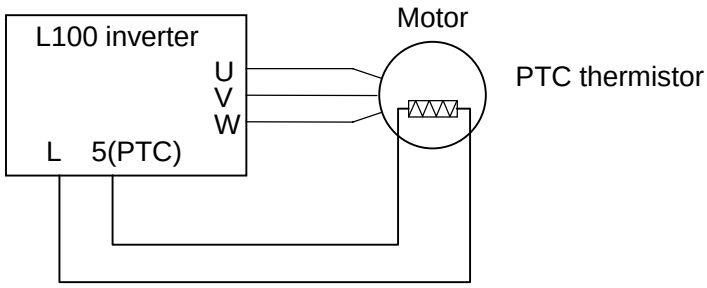

Except Japanese version

5-4. Over Temperature Detection of the Frequency Inverter

Frequency inverter has a temperature detection against power devices of the main circuit. Frequency inverter shuts down the output when temperature around IGBT comes up to 120 **degree C**.

6. Measurement & Replacement of Subassemblies

6-1. Insulation Measurement

For L100 inverter, **do not perform insulation measurements** , otherwise MOV will be damaged. (MOV; between R(L1)-G, S(L2)-G, T(L3)-G)

6.2. Power Components Measurements.

When checking the power components, the following procedure is recommended:

- Clear voltage
- Wait for capacitors discharge
- Check capacitors for neutrality
- Disconnect mains and motor wires
- Test the diodes and IGBTs using a universal tester with a diode function.

Visual check is important for the ISPM, check the outlooking such as smoke trace.

Note: In this test, the absolute values are not so important, since they depend strongly on the test device used. The uniformity of the measured value is more important.

[1] DC BUS Measurement

Check “+” <- “ - ” voltage Zero.

Resistance Measurement		Allowable Value
From	To	
+	-	50kohm or more

P1, PD are located on the CB board / snubber board.

Check “+1” and “+” terminal are shorten by (copper) bar.

[2] Softcharge Resistor (RS) , Thyristor (THY) Measurement

Resistance Measurement		Allowable Value
From	To	
P1	PD	15 to 25 ohm
PD	P1	

(From P1 To PD ＞ From PD To P1 ;if RS was opened)

[3] Rectifier Measurement

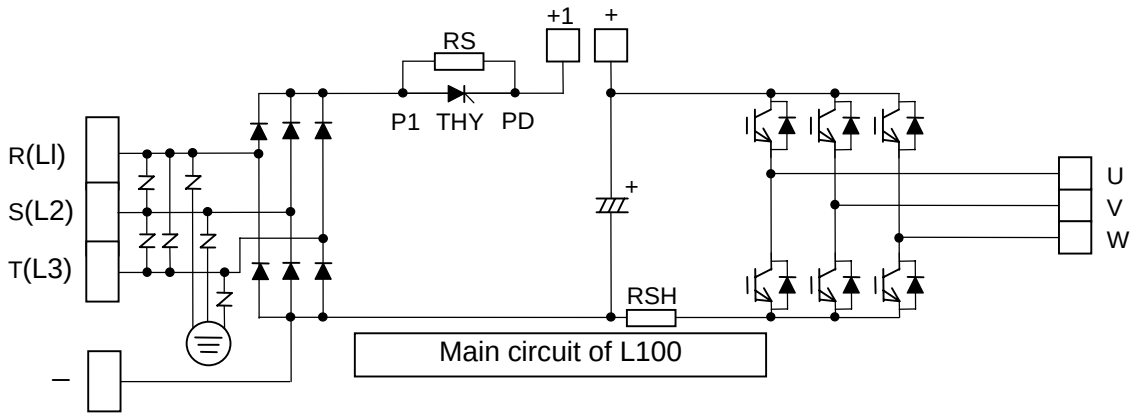

This is to measure 3 rectifiers located lower arm of the input side.

Resistance Measurement		Allowable Value
From	To	
R(LI)	S(L2)	50kohm or more
S(L2)	R(LI)	
S(L2)	T(L3)	
T(L3)	S(L2)	
T(L3)	R(LI)	
R(LI)	T(L3)	
R(LI)	⊜	
⊜	R(LI)	
S(L2)	⊜	
⊜	S(L2)	
T(L3)	⊜	
⊜	T(L3)	
Each R(LI), S(L2) and T(L3)	-	50kohm or more
-	Each R(LI), S(L2) and T(L3)	50 ohm or less
Each R(LI), S(L2) and T(L3)	P1	50 ohm or less
P1	Each R(LI), S(L2) and T(L3)	50kohm or more

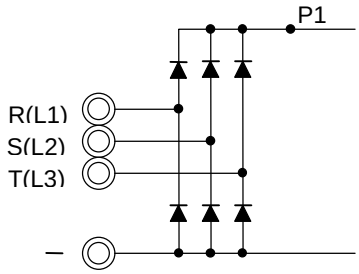

To make sure MOV, visual check of MOV is necessary on the ISPM.

If the result is out of its spec, replace the unit. (relative check is important)

[4] IGBT Measurement

Resistance Measurement		Allowable Value
From	To	
+	U	50kohm or more
+	V	
+	W	
U	+	50 ohm or less
V	+	
W	+	
-	U	50 ohm or less
-	V	
-	W	
U	-	50kohm or more
V	-	
W	-	

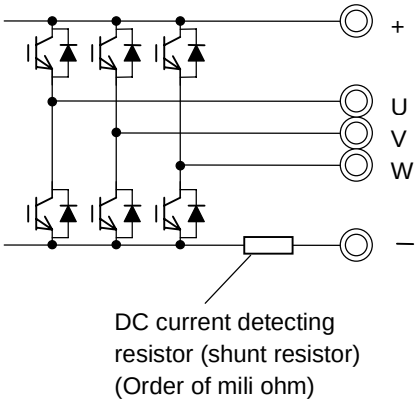

If the result is out of its spec, replace the unit.
Please note that this cannot cover 100% to find IGBT failure because if the power devices in failure, sometimes you can find the failure in components while they are activated. (You cannot find the failure while they are not activated.)

[5] Cooling FAN voltage circuit in the ISPM (PV 24N)

Measurement on the ISPM
Disconnect the cooling FAN

Resistance Measurement		Allowable Value
From	To	
Pin (Red)	Pin (Black)	20kohm or more
Pin (Black)	Pin (Red)	50ohm or less

(relative check is important)

[6] Cooling FAN

Disconnect the cooling FAN and measure impeadance of FAN circuit.

Resistance Measurement		Allowable Value
From	To	
Red wire	Black wire	50kohm or less
Black wire	Red wire	100kohm or more

(relative check is important)

7. Maintenance and Inspection Procedure

7-1. Precautions

(1) Maintenance and Inspection Precautions

Be sure to check the followings before starting maintenance and inspection because there is a danger of electrical shock.

- Display on the digital operation panel and POWER indication has been turned OFF.
- The voltage between + and - is 15Vdc or lower.
- Discharging resistor (500 ohm 30W for 200V class, 1k ohm 60W for 400V class) has been connected between + and - terminals for 15 seconds or more after main power had turned off,

(2) General Precautions

- Always keep the unit clean so that no dust nor other foreign materials come inside of the frequency inverter.
- Pay attention to broken lines and faulty connections. Firmly connect terminals and connectors.
- Keep frequency inverter away from moisture and oil.
- Dusts, steel filings , swarf , and other foreign materials can damage insulation and causing unexpected accidents/failure. Please pay attention to them.

7-2. Measurement of Mains Voltage, Current and Power

General measuring instruments for mains voltage, current and power are shown in Table 7-1.
The voltage to be measured is the effective value of fundamental wave, and the power to be measured is the total effective value.

(1) Measurement of output voltage

Moving iron type instrument does not show accurate values for measurement of the output voltage. Make measurements according to the method shown in Fig. 7-3 (table 7-1) or using the circuit indicated in Fig. 7-1 and 7-2.

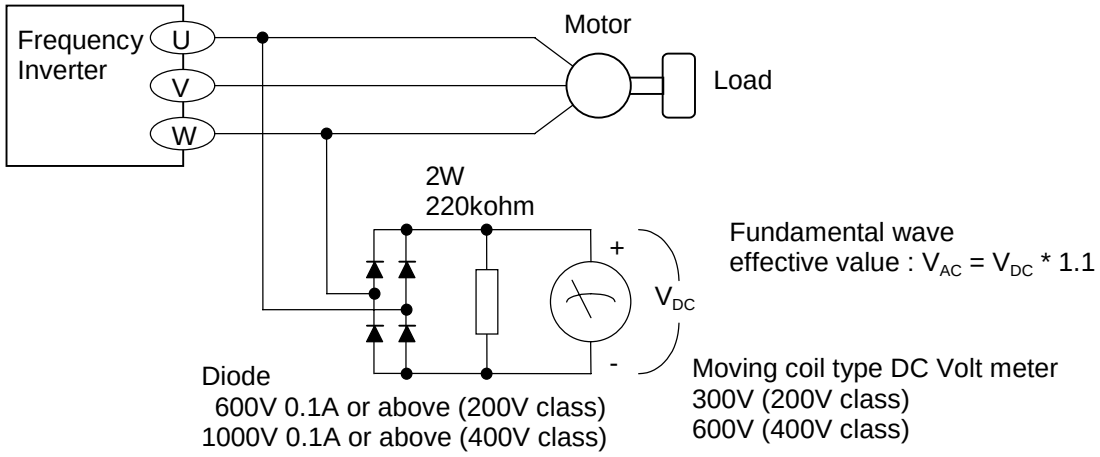

Fig. 7-1. Output voltage measurement circuit (with load)

When there is no motor connected to the inverter, please use additional resistor like Fig. 7-2. There will be a voltage at output terminal even the frequency command is naught due to the leakage current of the semiconductor devices.

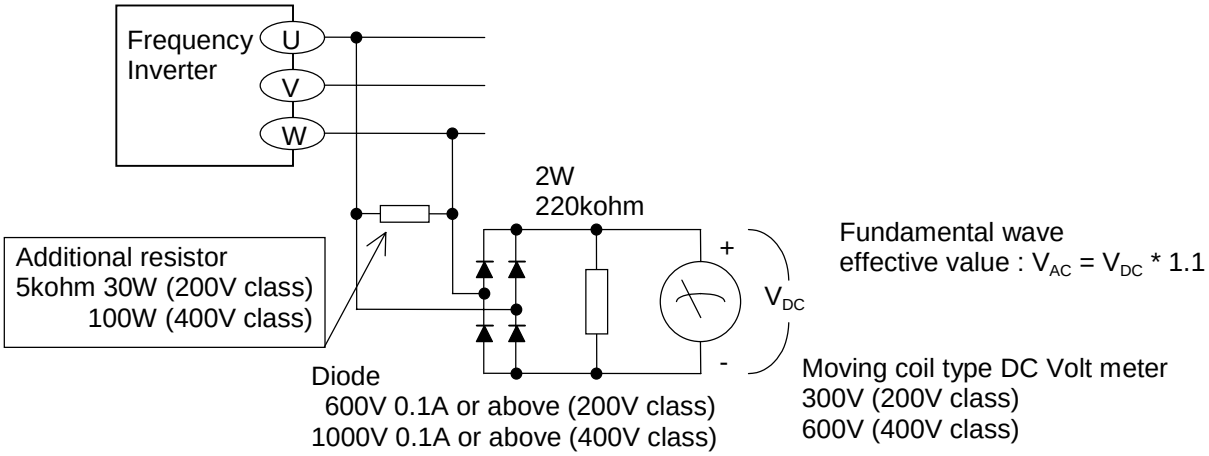

Fig. 7-2. Output voltage measurement circuit (without motor)

(2) Measurement of Input voltage and Input / output current

Use moving iron type ampere meter. (Refer to Fig. 7-3 and Table 7-1.)

(3) Measurement of Input and output power

Use electrodynamics type watt meter for single phase use. Make measurements for all 3 phases is case there is an unbalance in voltages and currents.

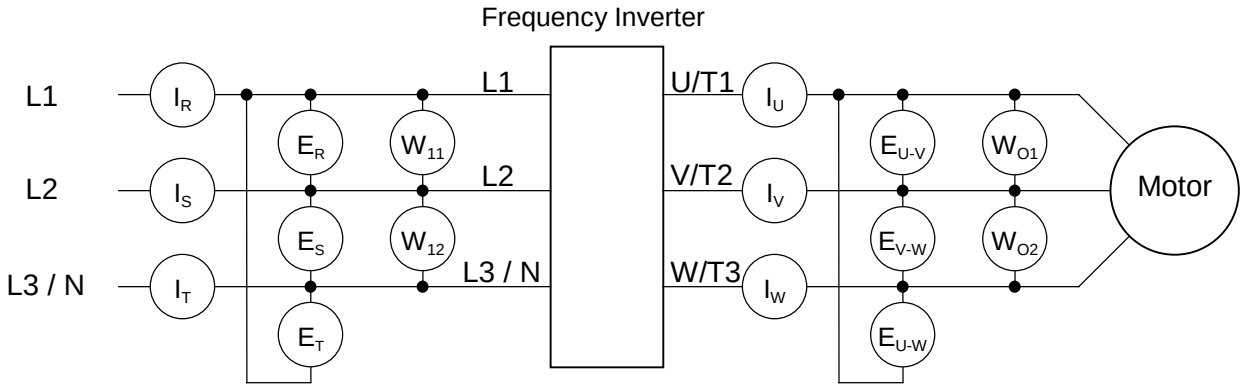

Fig. 7-3. Measurement Instruments

Table 7-1 Measuring Instruments

Item	Instruments	Type of Instrument	Remarks
Supply voltage E1	E_{L1-L2}, E_{L2-L3} and E_{L3-L1}	Moving iron type voltmeter or Rectifier type voltmeter	Fundamental wave effective value
Supply current I1	I_{L1}, I_{L2} and I_{L3}	Moving iron type ammeter	Total effective value
Supply power W1	W_{11} and W_{12}	Electrodynamics wattmeter	Total effective value
Supply power Factor Pf1	Calculate from above measured values E1, I1 and W1 $Pf1 = \frac{W_1}{\sqrt{3} \cdot E_1 \cdot I_1} \times 100(\%)$		
Output voltage Eo	E_{U-V}, E_{V-W} and E_{W-U}	According to Fig.7-1 and Fig.7-2	Total effective value
Output current Io	I_U, I_V and I_W	Moving iron type ammeter	Total effective value
Output power Wo	W_{O1} and W_{O2}	Electrodynamics wattmeter	Total effective value
Output power factor Pf2	Calculate from above measured values Eo, Io and Wo $Pf1 = \frac{W_O}{\sqrt{3} \cdot E_O \cdot I_O} \times 100(\%)$		

NOTE : Use a meter indicating a fundamental wave effective value for voltage, and meters indicating total effective values for current and power.

7-3. Maintenance of Parts

(1) Maintenance of printed circuit board (I/O board)

Printed circuit boards are maintenance free under normal applications except ALARAM relay (hardware). However, in case which maintenance and inspection are necessary, pay attention to the prevention of damage caused by static electricity as shown below.

* Prevent damage caused by static electricity

MCU and LSI on the printed circuit board can be destroyed by static electricity. Therefore be sure to ground work benches, soldering irons and yourself before start working on a printed circuit board.

(2) Maintenance of DC bus capacitor and cooling fan

We recommend that DC bus capacitors and cooling fans to be regularly replaced every three years taking their lives into account. Please note that their life span shorten when they are used in high temperatures and heavy loads.

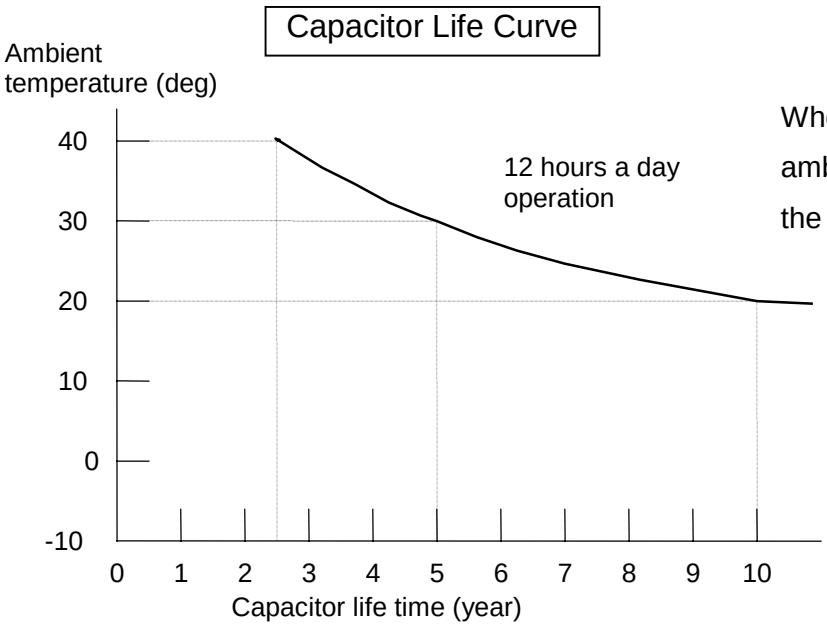

When the inverter is installed in a cabinet, ambient temperature is the temperature in the cabinet.

7-4. If you install replacement INV at site

If you install replacement units at site, please preset the parameter by the panel or copy unit.

If you used the previous I/O board to replacement unit, the parameters are not changed.

Because parameters are memorized in the EEPROM on the control board on J100 /J300 series, and if we used the previous control board to replacement unit at site to minimize the time. In case of L100,SJ100 series, EEPROM is on the ISPM, even we replaced I/O board, the parameter is still the same.

8. Daily Inspection and Periodical Inspection

Inspection point	Item	Contents	Cycle		Method	Criteria	Standard replacement period	Instruments
			daily	periodic				
Overall	Ambient Environment	Check ambient temperature, humidity, dust, corrosive gas, oil mist, etc.	✓			Ambient temperature : -10deg to 40deg, no icing		Thermometer
	Devices overall	Check for abnormal vibrations and noise.	✓		Visual and aural inspection			Hygrometer
	Power supply voltage	Check voltage between input lines.	✓		Measure the voltage between input terminals	No abnormalities. Within its specification		Tester
Main circuit	Overall	Check installation for looseness.		✓	Tighten	Tightening torque (except for terminal block) M3: 0.5 - 0.6 N-m M4: 0.98 - 1.3 N-m		
		Check for evidence of over heating in the various components		✓	Visual inspection			
		Clean		✓				
	Terminal block	No damage		✓	Visual inspection	No abnormalities		
	DC bus capacitor	Check for leaking liquid	✓		Visual	No abnormalities		
		Check for swelling			inspection			
	Relay	Check for stuttering noise when operation		✓	Aural inspection	No abnormalities		
	Resistors	Check for cracks or changes in color		✓	Visual inspection	No abnormalities		Tester
	Cooling fan	Check for abnormal vibration and noise	✓		-Rotate manually while power off -Increase tightening	- Smooth rotation - No abnormalities	2 - 3 years	
		Check for dust	✓		Visual inspection			

Inspection point	Item	Contents	Cycle		Method	Criteria	Standard replacement period	Instruments
			daily	periodic				
Control circuit	Operation check	Check the balance of the output voltage of each phase to phase without motor.		✓	Measure the output voltage between U, V and W	Within 2% of voltage difference between each phases.		See next page
		Perform a sequence protection operation test and make sure that there are no errors in the protection and display circuits.		✓	Simulate operation of the protection circuit	Operate without any trouble		
	Component check including PCB	No abnormal odor nor changes in color.		✓	Visual inspection	No abnormalities		
		No significant corrosion.		✓				
	Capacitors on I/O board	No liquid leakage nor deformation.	✓		Visual inspection	No abnormalities		
Display	Digital operation panel	- No illegible display - No lack of character - Segment failure of LEDs	✓		Visual inspection	Normal operation. Display is readable.		

8-2/E

NOTE : 1. Life time of capacitor is affected by the ambient temperature. See Capacitor Life Curve in the following.
2. The frequency inverter must be cleaned periodically. If dust accumulates on the fan and heat sink, it can cause overheating.
3. See page 30 for the life time of the capacitor.

9. Image block diagram

(1). IMAGE BLOCK DIAGRAM OF L100-LFU,NFE INVERTER

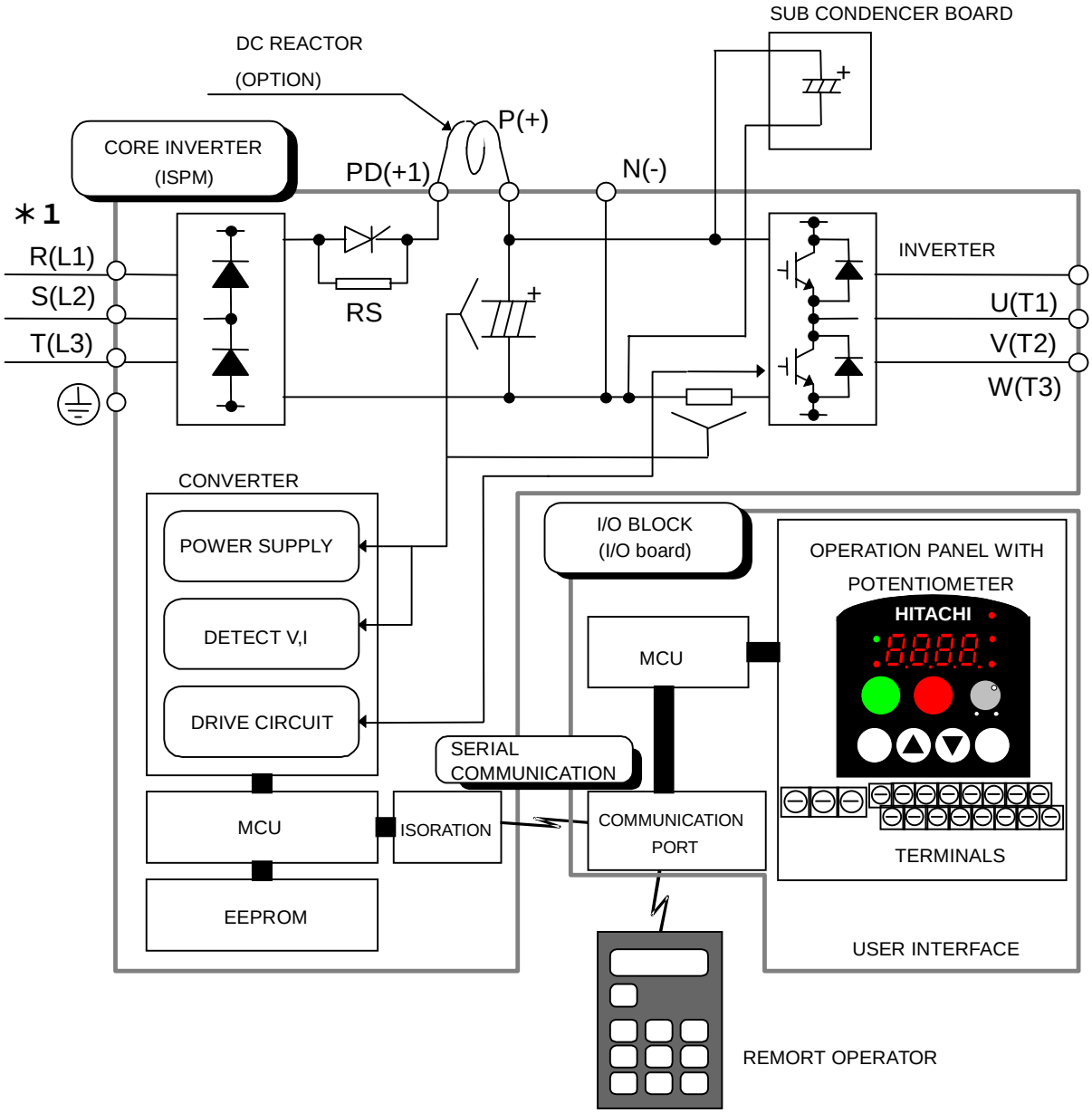

EMC DIRECTIVE COMPLIANT WITH DEDICATED NOISE FILTER(OPTION)

(2). IMAGE BLOCK DIAGRAM OF L100-HFE,HFU INVERTER

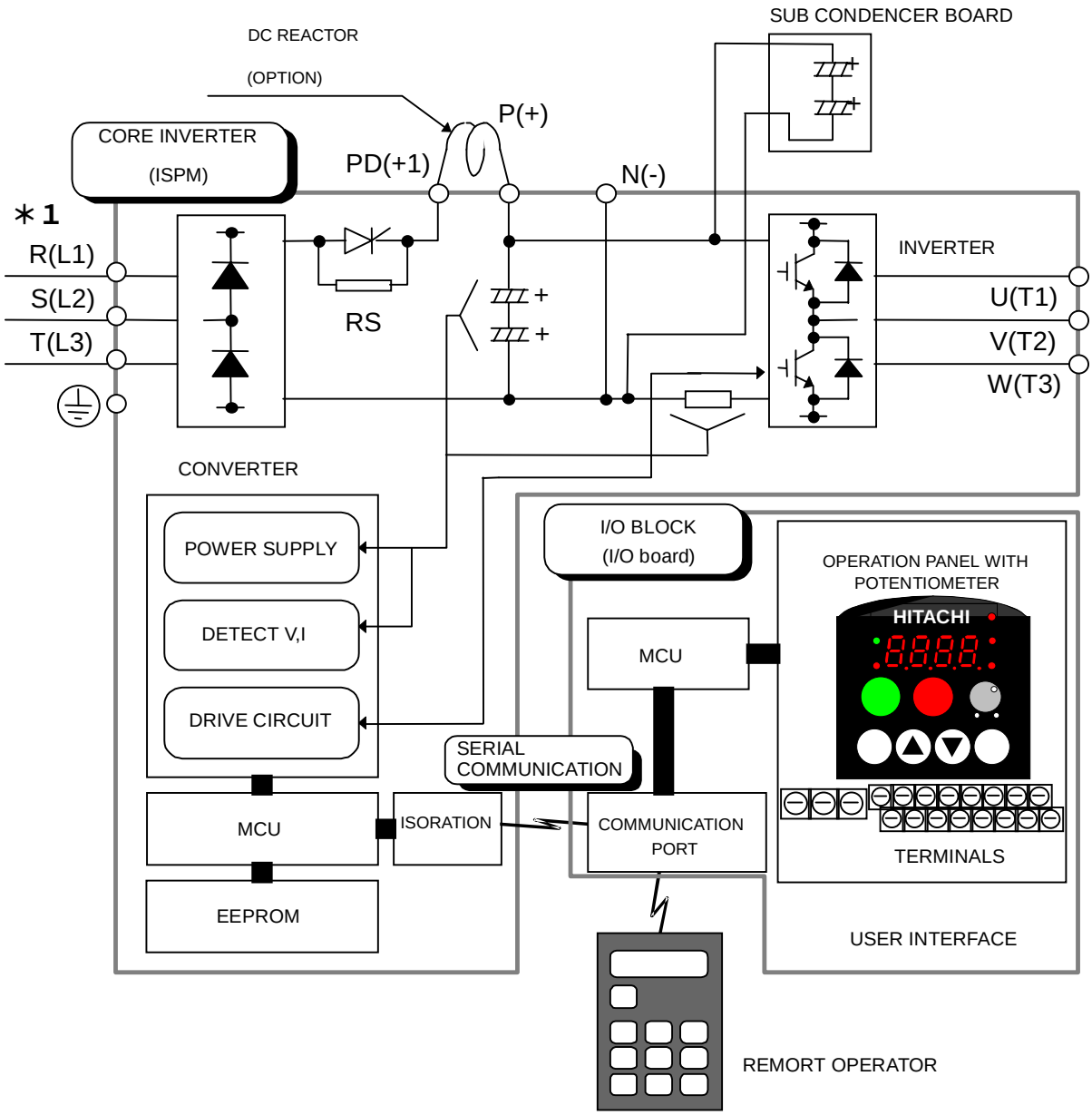

EMC DIRECTIVE COMPLIANT WITH DEDICATED NOISE FILTER(OPTION)

(3). IMAGE BLOCK DIAGRAM OF L100-MFU INVERTER

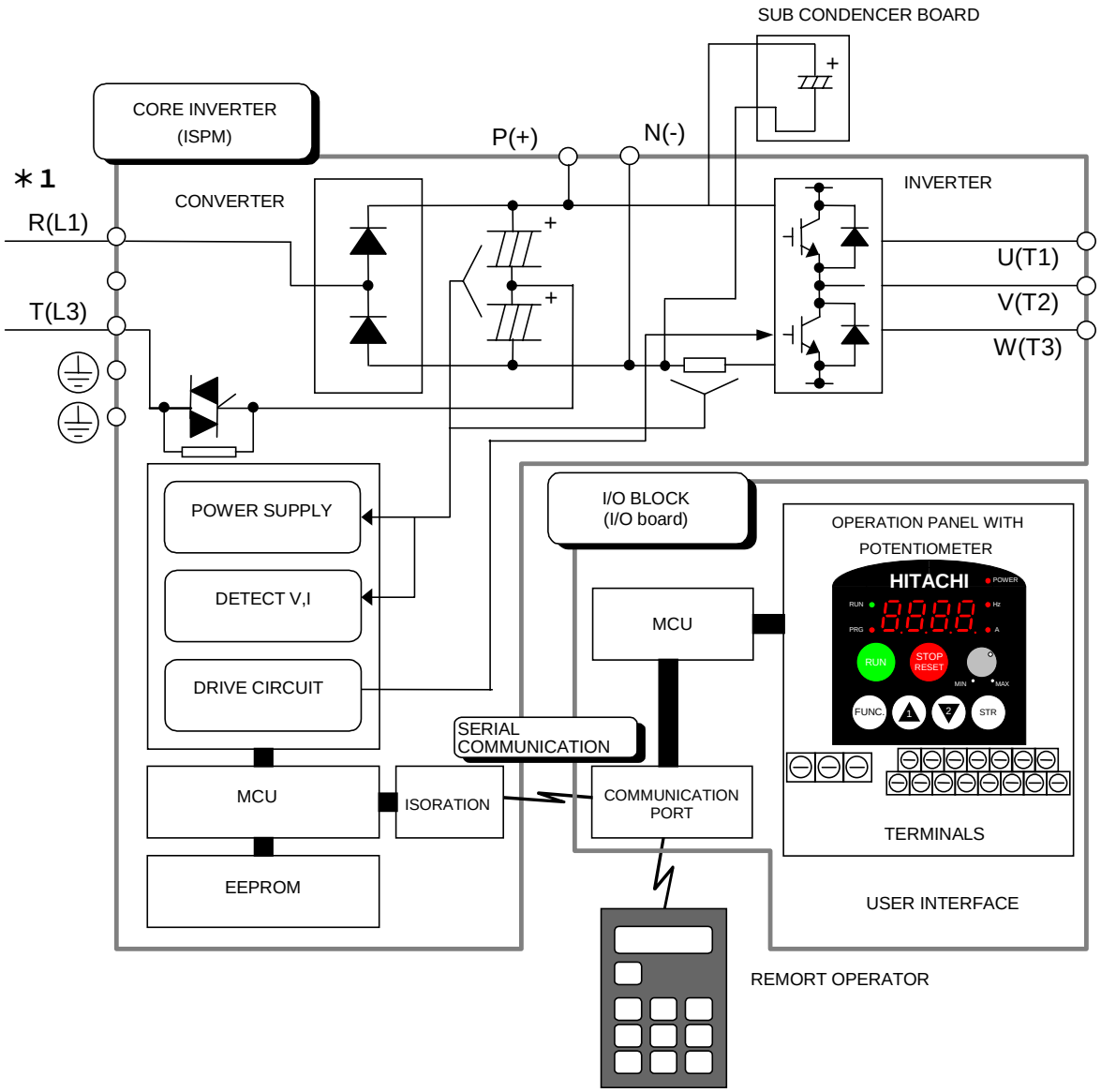

EMC DIRECTIVE COMPLIANT WITH DEDICATED NOISE FILTER(OPTION)

10-1. Spare Parts list

No.	Class	Parts Code	DWG.No.	Parts Name	Remarks	Quantity	Lot
1	D	254819	2T004353 2	Key PAD (HITACHI)	For all models	1	10
2	D	254821	2T004372 1	Front case (S)	L100-002,004NFE;NFU	1	10
2	D	254818	1T001784 1	Front case (L)	L100-005--022NFE;NFU L100-037--075LFU L100-004--075HFE;HFU L100-002--007MFU	1	10
3	D	254869	3T015677 1	Key cover	For all models	1	10
4	D	254831	4T013420 1	Volume KNOB	For all models	1	10
5	D	254830	4T013419 1	Top cover (S)	L100-002,004NFE;NFU	1	10
5	D	254832	4T013459 1	Top cover (L)	L100-005--022NFE L100-007--022NFU;037LFU L100-004--040HFE;HFU Except Japanese version and L100-MFU	1	10
5	D	254872	3T016369 1	Top cover (LL)	L100-055,075LFU;HFE;HFU	1	10
6	D	254820	2T004371 1	Case (S)	L100-002,004NFE;NFU	1	10
6	D	254817	1T001783 1	Case (M)	L100-005,007NFE L100-007NFU L100-004--015HFE;HFU L100-002,004MFU	1	10
6	D	254816	1T001782 1	Case (L)	L100-011--022NFE L100-015,022NFU;037LFU L100-022--040HFE;HFU L100-007MFU	1	10
6	D	254866	1T001858 1	Case (LL)	L100-055,075LFU;HFE;HFU	1	10
7	D	254829	4T013417 1	Rear cover (S)	L100-002,004NFE;NFU	1	10
7	D	254825	3T015700 1	Rear cover (L)	L100-005--022NFE L100-007--022NFU;037LFU L100-004--040HFE;HFU L100-002--007MFU	1	10
7	D	254871	3T016368 1	Rear cover (LL)	L100-055,075LFU;HFE;HFU	1	10
8	D	254826	3T015710 1	Condensor cover (L)	L100-011--022NFE L100-015,022NFU;037LFU L100-022--040HFE;HFU L100-007MFU	1	10
8	D	254868	2T004495 1	Condensor cover (LL)	L100-055,075LFU;HFE;HFU	1	10

No.	Class	Parts Code	DWG.No.	Parts Name	Remarks	Quantity	Lot
9	C	254270	3T012518 2	Cooling fan	L100-015,055,075HFE;HFU L100-015,055LFU	1	3
9	C	254270	3T012518 2	Cooling fan	L100-075LFU	2	3
9	D	254822	3T011924 4	Cooling fan	L100-022NFE;NFU L100-037LFU L100-022--040HFE;HFU	1	3
10	D	254827	4T013337 1	ISPM-IO Cable (S)	L100-002--022NFE;NFU L100-004--040HFE;HFU L100-037LFU	1	10
10		254828	4T013337 4	ISPM-IO Cable (L)	L100-055,075LFU;HFE;HFU	1	10
11		---	3T015514 3	ISPM (without PCB2)	L100-002NFE;NFU	1	1
11		--	3T015516 3	ISPM (without PCB2)	L100-004NFE;NFU	1	1
11		--	3T015523 3	ISPM (without PCB2)	L100-005,007NFE L100-007NFU	1	1
11		--	3T015520 3	ISPM (without PCB2)	L100-011,015NFE L100-015NFU	1	1
11		--	3T015522 3	ISPM (without PCB2)	L100-022NFE;NFU	1	1
11		--	3T015524 3	ISPM (without PCB2)	L100-037LFU	1	1
11		--	3T016566 2	ISPM (without PCB2)	L100-055LFU	1	1
11		--	3T016567 2	ISPM (without PCB2)	L100-075LFU	1	1
11		--	3T015526 1	ISPM (without PCB2)	L100-004HFE;HFU	1	1
11		--	3T015527 1	ISPM (without PCB2)	L100-007HFE;HFU	1	1
11		--	3T015528 1	ISPM (without PCB2)	L100-015HFE;HFU	1	1
11		--	3T015529 1	ISPM (without PCB2)	L100-022HFE;HFU	1	1
11		--	3T015530 1	ISPM (without PCB2)	L100-030,040HFE L100-040HFU	1	1
11		--	3T016568 3	ISPM (without PCB2)	L100-055HFE;HFU	1	1
11		--	3T016569 3	ISPM (without PCB2)	L100-075HFE;HFU	1	1
12		254890	4T013548 1	RS(soft charge resistor)	L100-002--022NFE;NFU L100-037,055LFU L100-004--055HFE;HFU L100-002--007MFU	1	10
12		254890	4T013548 1	RS(soft charge resistor)	L100-075HFE;HFU;LFU	2	10

No.	Class	Parts Code	DWG.No.	Parts Name	Remarks	Quantity	Lot
13		--	4T013438 1	Copper bar	L100-002,004NFE;NFU	1	10
13		--	4T013439 1	Copper bar	L100-005--022NFE L100-007--022NFU L100-037LFU L100-004--040HFE;HFU L100-002--007MFU	**1**	**10**
14		--	L100EUL	I/O board	L100-002--022NFE;NFU L100-037LFU L100-004--040HFE;HFU L100-002--007MFU	1	1
14		---	L100 075EUL	I/O board	L100-055,075LFU L100-055,075HFE;HFU	1	1
15		--	CB470	Capacitor board	L100-011,015NFE L100-015NFU L100-037LFU	1	1
15		--	CB680	Capacitor board	L100-022NFE;NFU	1	1
15		--	CB470H	Capacitor board	L100-030,040HFE L100-040HFU	1	1
15		--	CB680M	Capacitor board	L100-007MFU	1	1
15		--	CB68X4L	Capacitor board	L100-055LFU	1	1
15		--	CB68X6L	Capacitor board	L100-075LFU	1	1
15		--	CB68X4H	Capacitor board	L100-055HFE;HFU	1	1
15		--	CB68X6H	Capacitor board	L100-075HFE;HFU	1	1
16		---	CB330A	PCB2	L100-002NFE;NFU	1	1
16		---	CB680A	PCB2	L100-004NFE;NFU	1	1
16		---	CB560B2	PCB2	L100-005,007NFE; L100-007NFU	1	1

No.	Class	Parts Code	DWG.No.	Parts Name	Remark	Quantity	Lot
16		---	CB470B2T	PCB2	L100-011,015NFE L100-015NFU L100-037LFU	1	1
16		---	CB680B2T	PCB2	L100-022NFE;NFU	1	1
16		---	L100SB055L	PCB2	L100-055LFU	1	1
16		---	L100SB075L	PCB2	L100-075LFU	1	1
16		---	CB180B4	PCB2	L100-004HFE;HFU	1	1
16		---	CB270B4	PCB2	L100-007HFE;HFU	1	1
16		---	CB470B4	PCB2	L100-015HFE;HFU	1	1
16		---	CB680B4	PCB2	L100-022HFE;HFU	1	1
16		---	CB470B4	PCB2	L100-030,040HFE L100-040HFU	1	1
16		---	L100SB055H	PCB2	L100-055HFE;HFU	1	1
16		---	L100SB075H	PCB2	L100-075HFE;HFU	1	1
16		---	CB1000B2	PCB2	L100-002MFU	1	1
16		---	CB1800B2	PCB2	L100-004MFU	1	1
16		---	CB1800B2T	PCB2	L100-007MFU	1	1

Note No.10 4T013337 3 is usable for 4T01337 4. The difference is the length.

No.13 The copper bar is used between ISPM and heatsink.

C/H version is applied US version except key pad/knob/cover/case etc.

(S) ; 002NFE,004NFE,002NFU,004NFU

(M) ; 005NFE,007NFE,004HFE,007HFE,015HFE,007NFU,004HFU,007HFU,015HFU

(L) ; 011NFE,015NFE,022NFE,015NFU,022NFU,022HFE,030HFE,040HFE,022HFU,040HFU,037LFU

(LL) ; 055HFE,075HFE,055LFU,075LFU,055HFU,075HFU

This spare parts list will be changed without notice. To get latest spare parts list, please contact to sales office.

This service manual may not be revised if the spare parts list was revised.

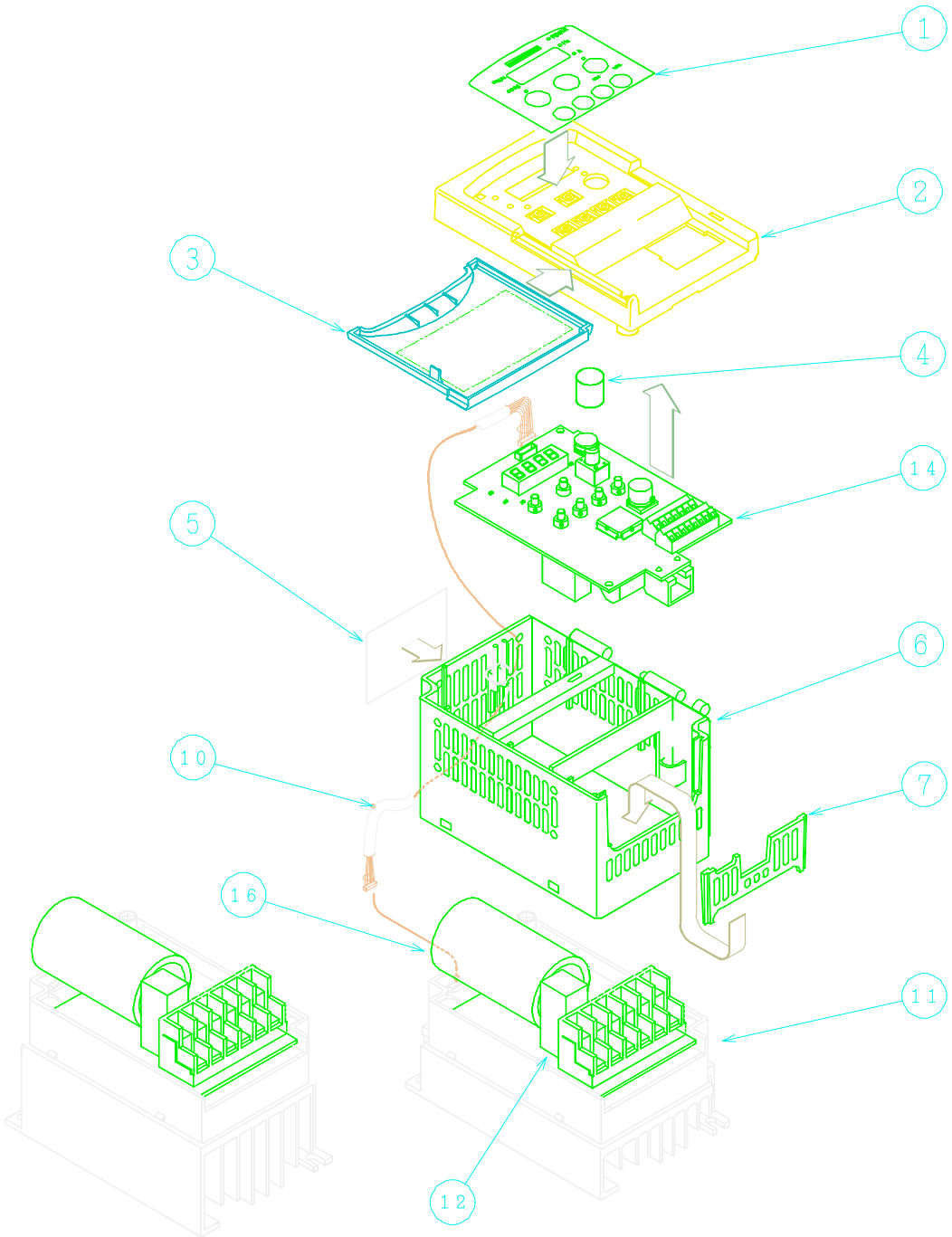

No.	Parts name	Quantity
1	Keypad	1
2	Front case (L)	1
3	Key cover	1
4	Volume knob	1
5	Top cover (S)	1
6	Case (S)	1
7	Rear cover (S)	1
10	ISPM – IO cable (S)	1
11	ISPM	1
12	RS	1
14	I/O board	1
16	PCB2	1

L100-002NFE
002NFU
004NFE
004NFU

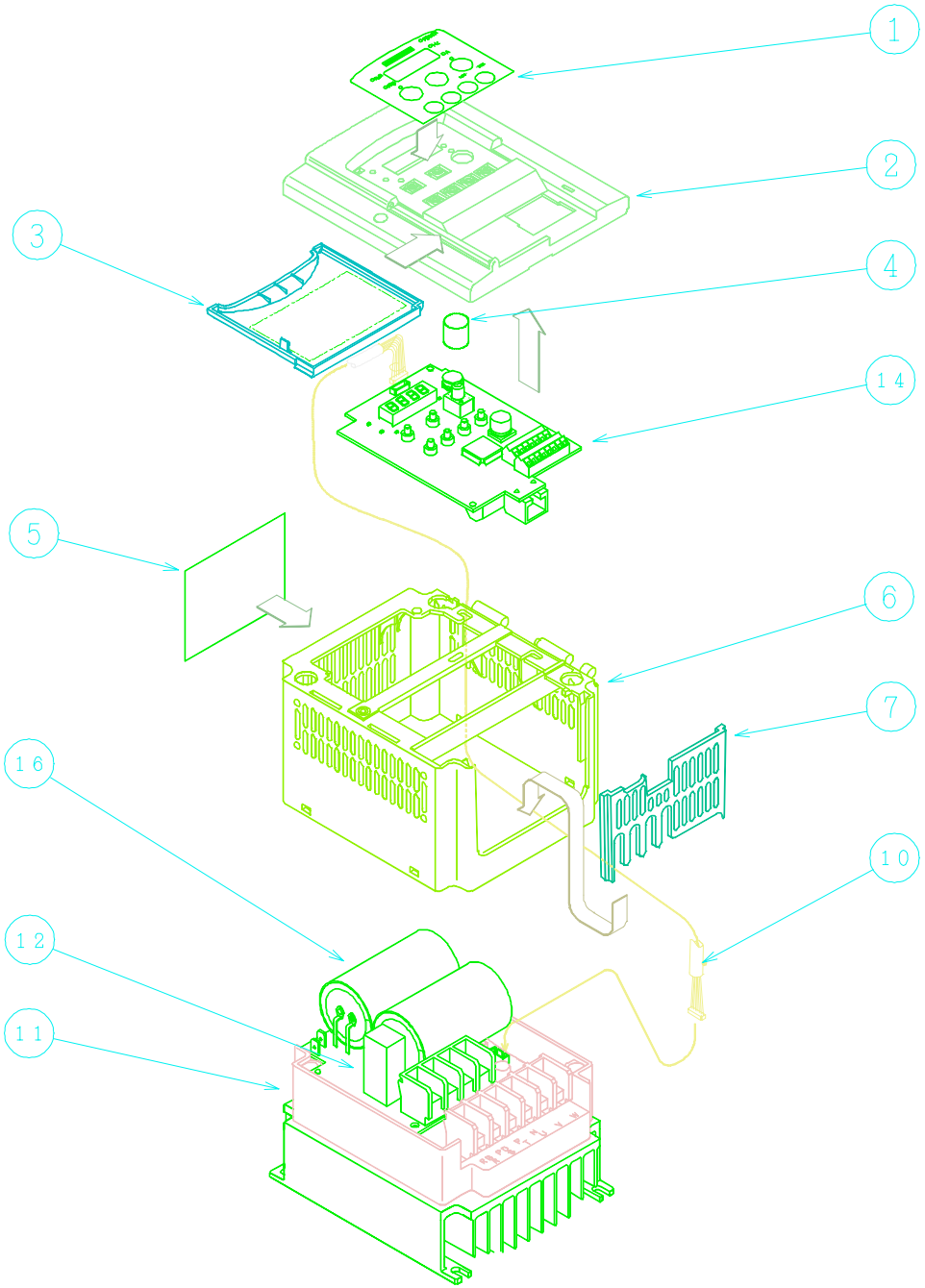

No.	Parts name	Quantity
1	Keypad	1
2	Front case (L)	1
3	Key cover	1
4	Volume knob	1
5	Top cover (L)	1
6	Case (M)	1
7	Rear cover (L)	1
10	ISPM – IO cable (L)	1
11	ISPM	1
12	RS	1
14	I/O board	1
16	PCB2	1

L100-004HFE
004HFU
005NFE
007NFE
007NFU

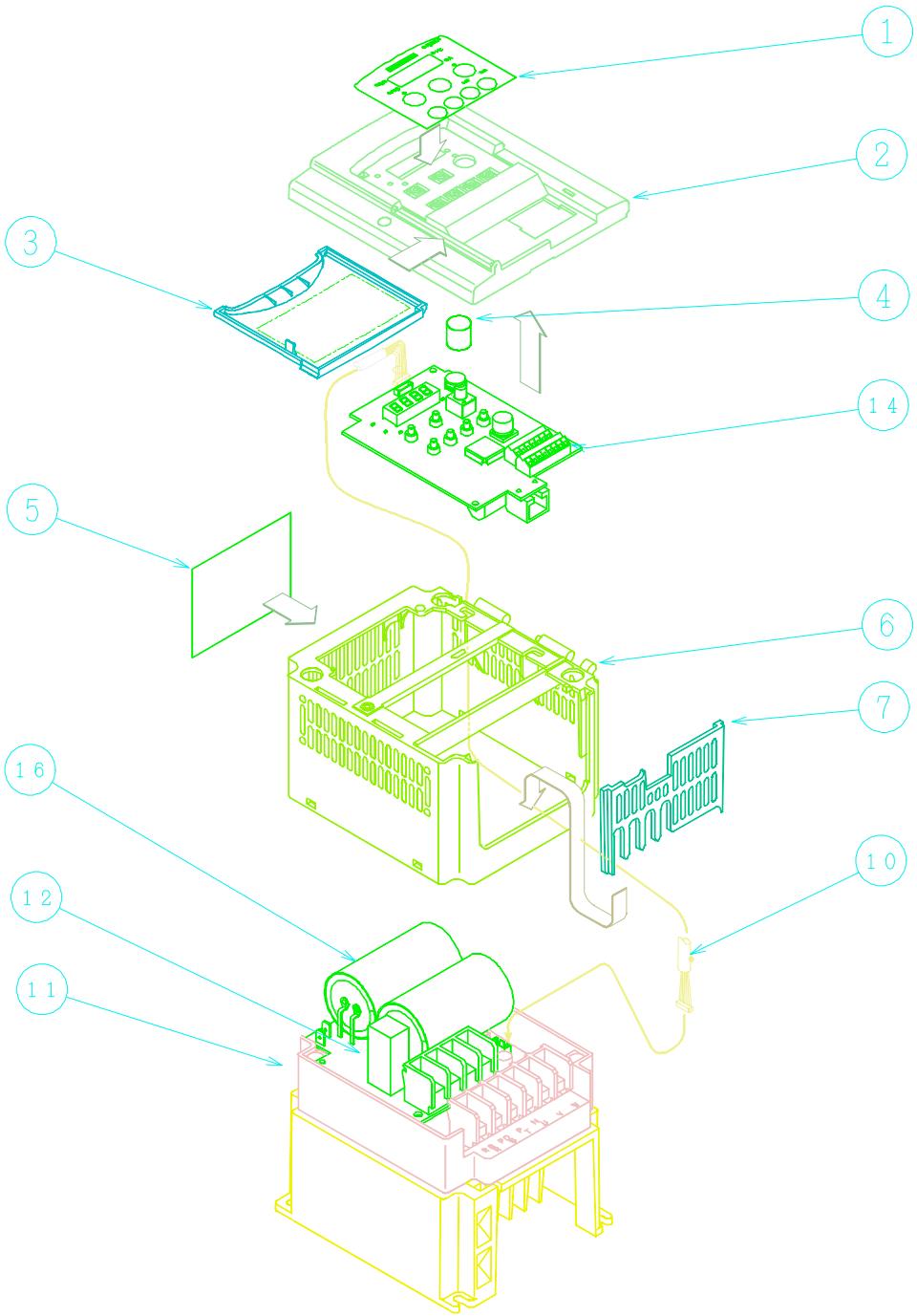

No.	Parts name	Quantity
1	Keypad	1
2	Front case (L)	1
3	Key cover	1
4	Volume knob	1
5	Top cover (L)	1
6	Case (M)	1
7	Rear cover (L)	1
10	ISPM – IO cable (L)	1
11	ISPM	1
12	RS	1
14	I/O board	1
16	PCB2	1

L100-007HFE
007HFU

Call 1(800)985-6929 for Sales hitachiacdrive.com sales@hitachiacdrive.com

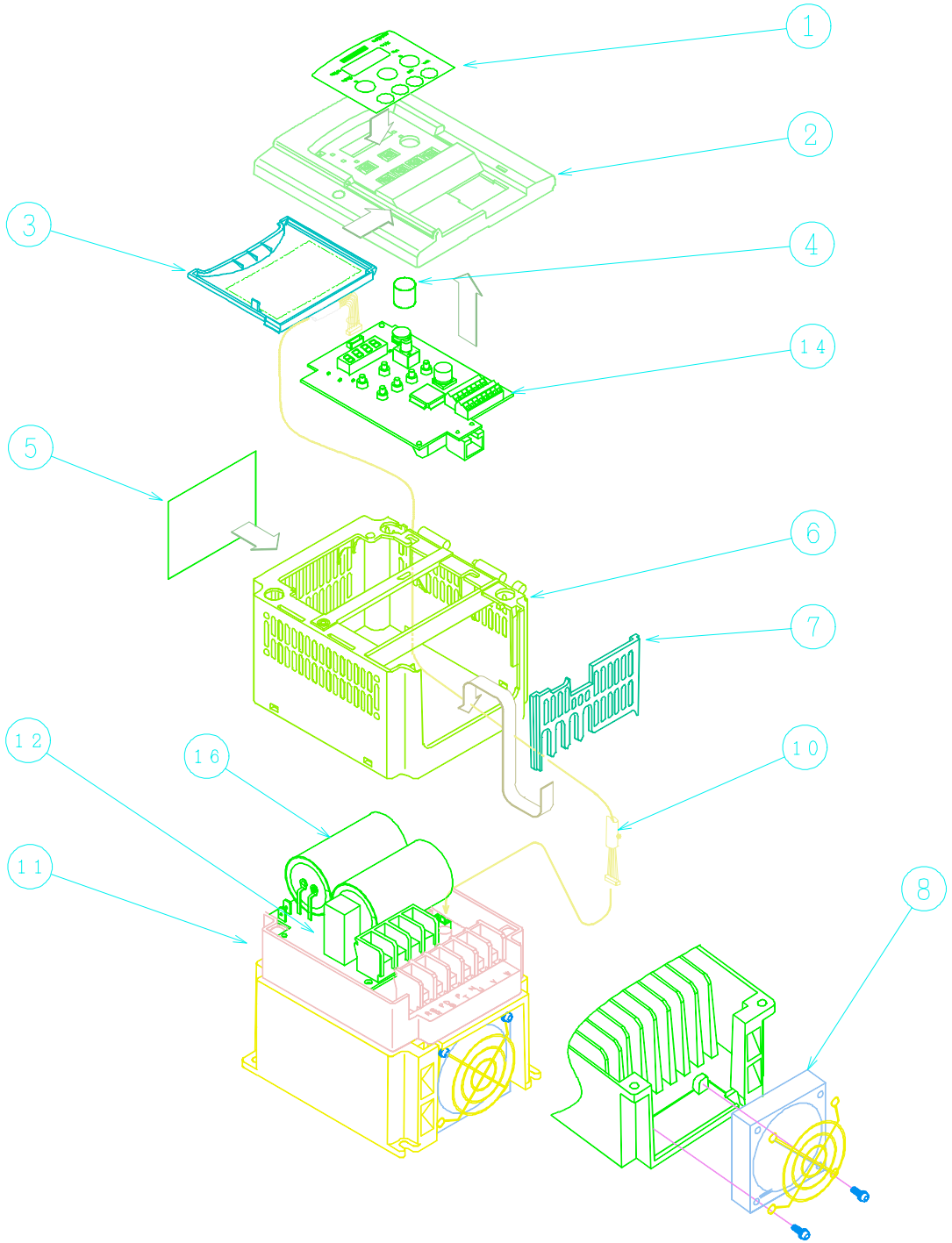

No.	Parts name	Quantity
1	Keypad	1
2	Front case (L)	1
3	Key cover	1
4	Volume knob	1
5	Top cover (L)	1
6	Case (M)	1
7	Rear cover (L)	1
8	Cooling fan (L)	1
10	ISPM – IO cable (L)	1
11	ISPM	1
12	RS	1
14	I/O board	1
16	PCB2	1

L100-015HFE
015HFU

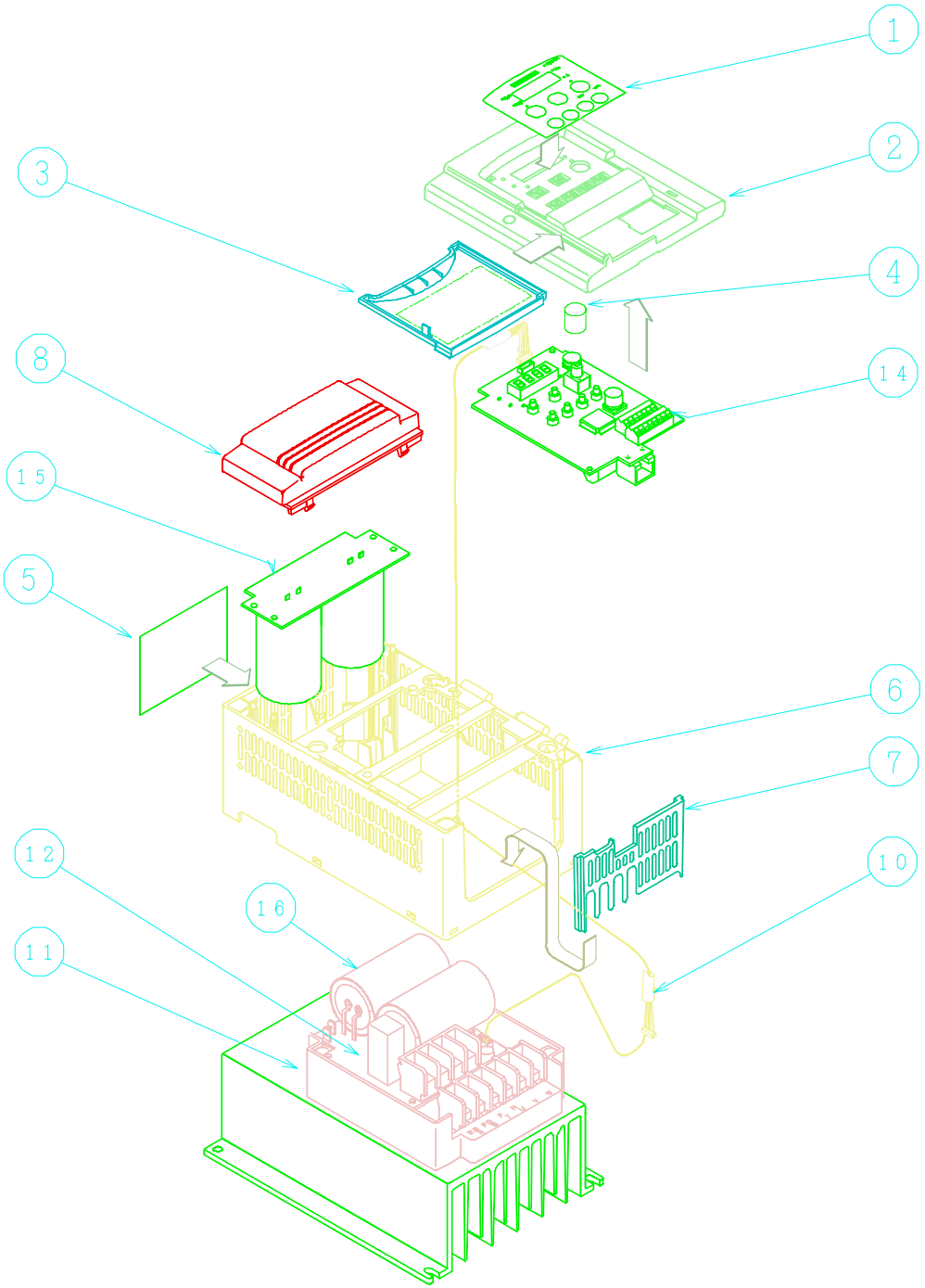

No.	Parts name	Quantity
1	Keypad	1
2	Front case (L)	1
3	Key cover	1
4	Volume knob	1
5	Top cover (L)	1
6	Case (L)	1
7	Rear cover (L)	1
8	Condensor cover	1
10	ISPM – IO cable (L)	1
11	ISPM	1
12	RS	1
14	I/O board	1
15	Capacitor board	1
16	PCB2	1

L100-011NFE
015NFE
015NFU

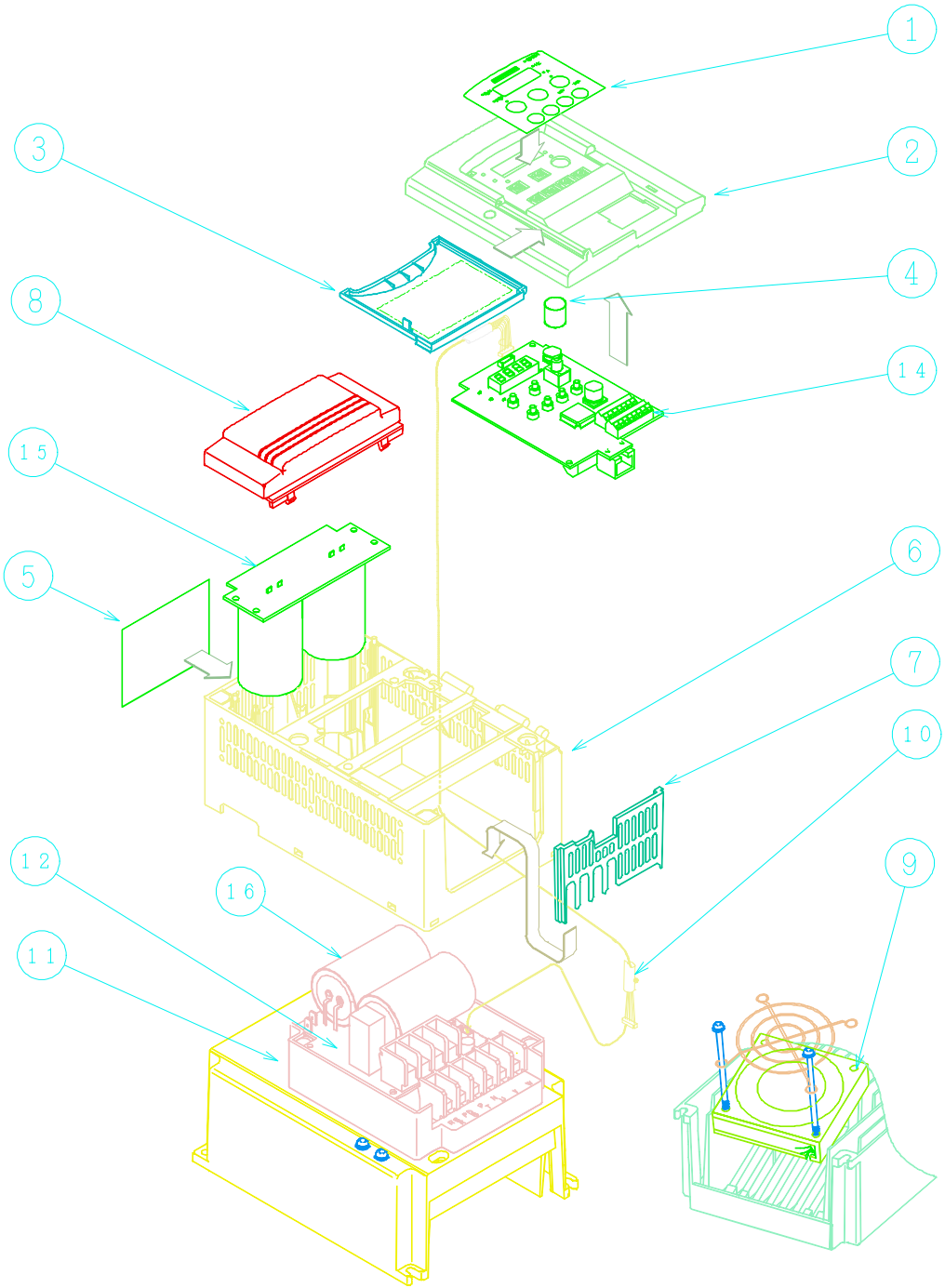

No.	Parts name	Quantity
1	Keypad	1
2	Front case (L)	1
3	Key cover	1
4	Volume knob	1
5	Top cover (L)	1
6	Case (L)	1
7	Rear cover (L)	1
8	Condensor cover	1
9	Cooling fan (L)	1
10	ISPM – IO cable (L)	1
11	ISPM	1
12	RS	1
14	I/O board	1
15	Capacitor board	1
16	PCB2	1

L100-022NFE
022NFU
030HFE
037LFU
040HFE
040HFU

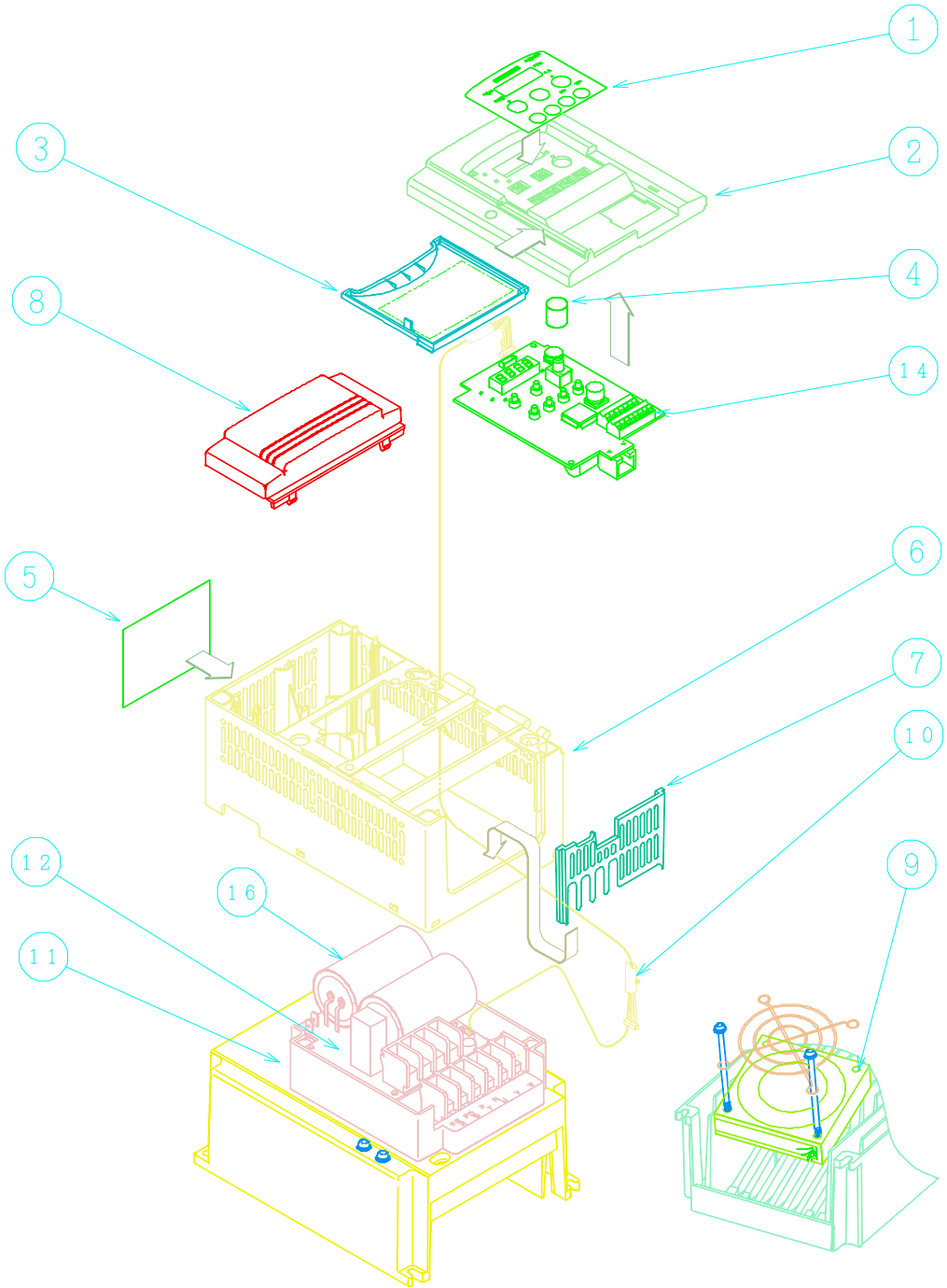

No.	Parts name	Quantity
1	Keypad	1
2	Front case (L)	1
3	Key cover	1
4	Volume knob	1
5	Top cover (L)	1
6	Case (L)	1
7	Rear cover (L)	1
8	Condensor cover	1
9	Cooling fan (L)	1
10	ISPM – IO cable (L)	1
11	ISPM	1
12	RS	1
14	I/O board	1
16	PCB2	1

L100-022HFE
022HFU

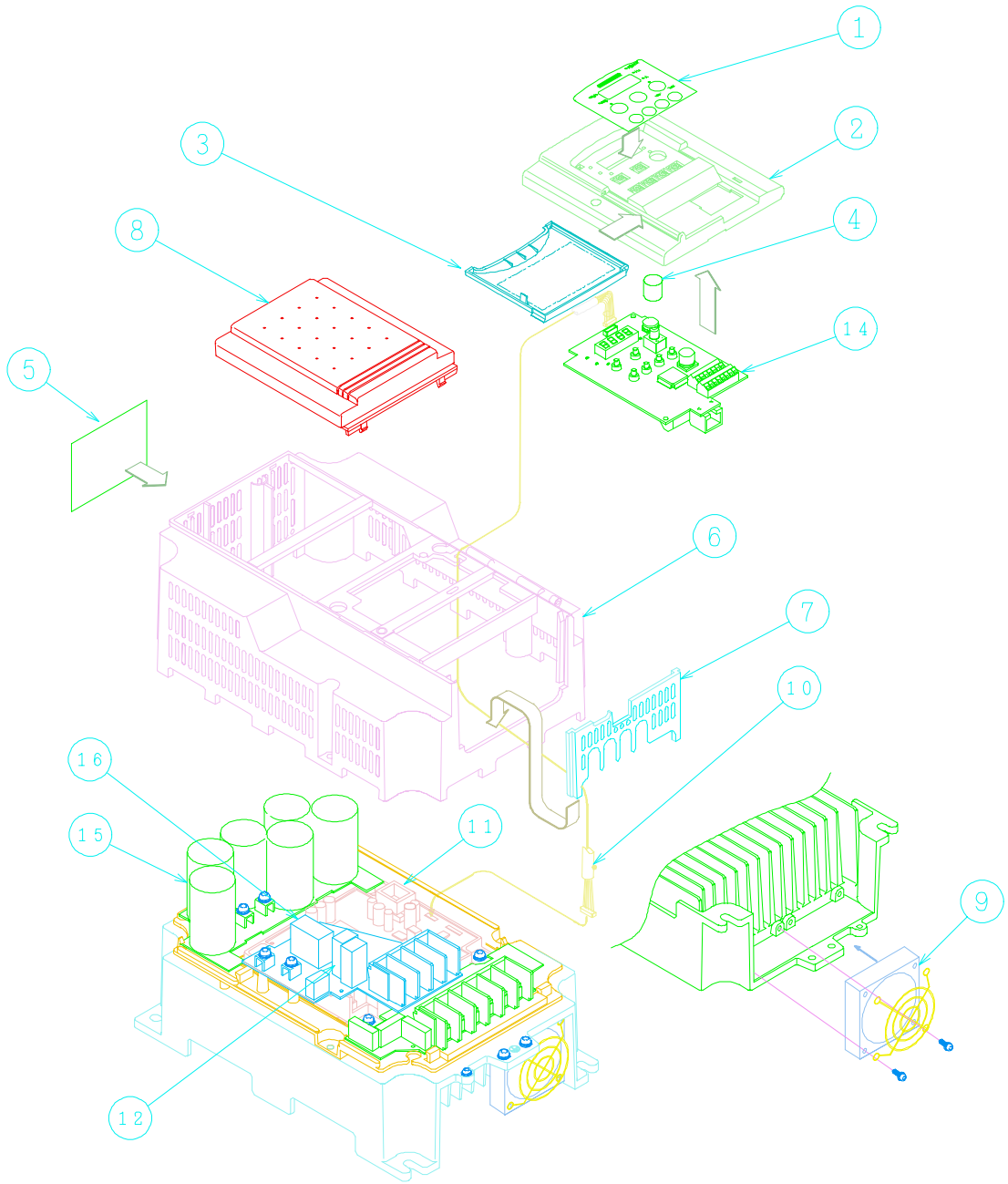

No.	Parts name	Quantity
1	Keypad	1
2	Front case (L)	1
3	Key cover	1
4	Volume knob	1
5	Top cover (LL)	1
6	Case (LL)	1
7	Rear cover (LL)	1
8	Condensor cover (LL)	1
9	Cooling fan (S)	1
10	ISPM – IO cable (L)	1
11	ISPM	1
12	RS	1
14	I/O board	1
15	Capacitor board	1
16	PCB2	1

L100-055LFU
055HFU
075HFU
055HFE
075HFE

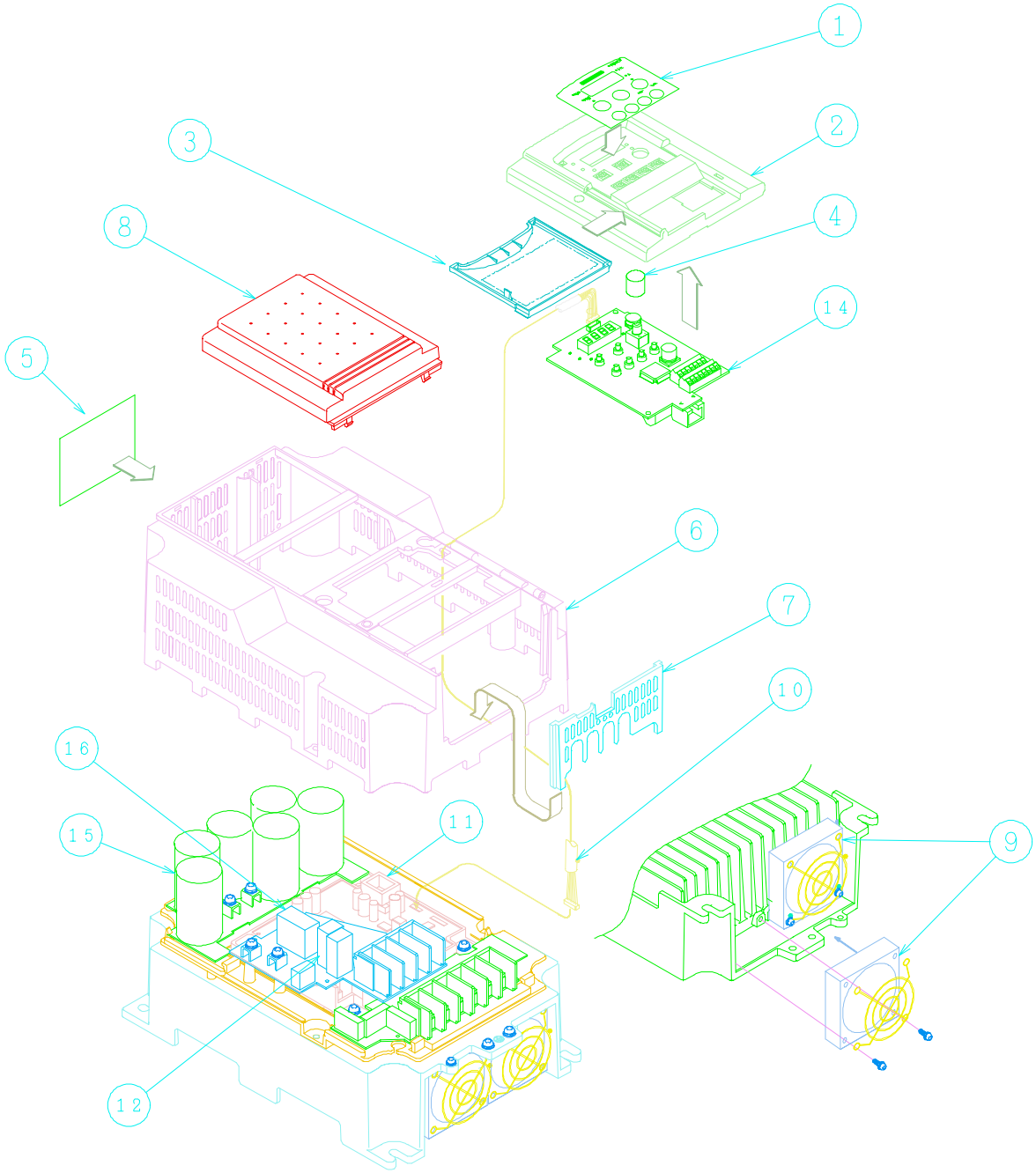

No.	Parts name	Quantity
1	Keypad	1
2	Front case (L)	1
3	Key cover	1
4	Volume knob	1
5	Top cover (LL)	1
6	Case (LL)	1
7	Rear cover (LL)	1
8	Condensor cover (LL)	1
9	Cooling fan (S)	2
10	ISPM – IO cable (L)	1
11	ISPM	1
12	RS	1
14	I/O board	1
15	Capacitor board	1
16	PCB2	1

L100-075LFU

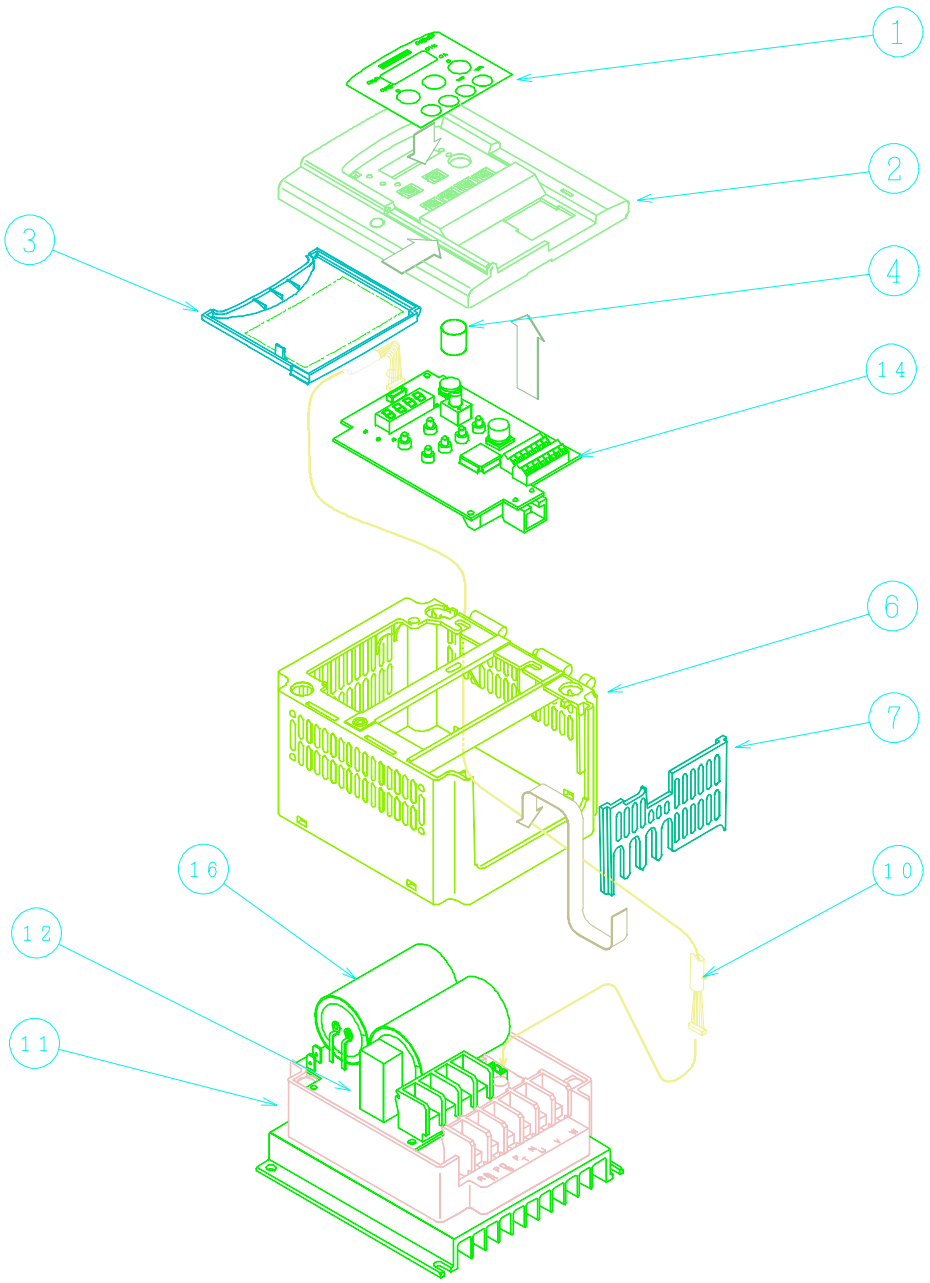

No.	Parts name	Quantity
1	Keypad	1
2	Front case (L)	1
3	Key cover	1
4	Volume knob	1
6	Case (M)	1
7	Rear cover (L)	1
10	ISPM – IO cable (L)	1
11	ISPM	1
12	RS	1
14	I/O board	1
16	PCB2	1

L100-002MFU
004MFU

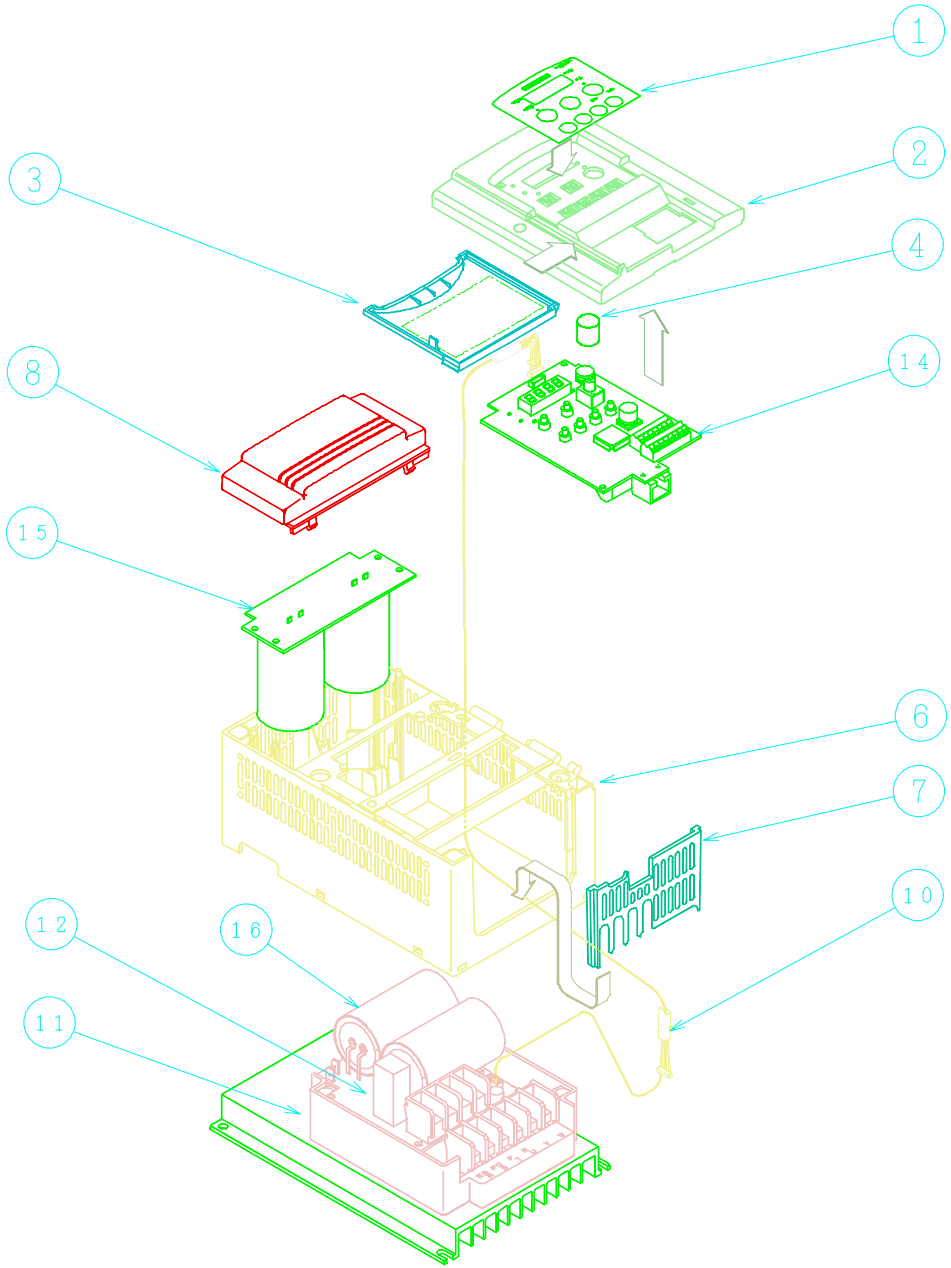

No.	Parts name	Quantity
1	Keypad	1
2	Front case (L)	1
3	Key cover	1
4	Volume knob	1
6	Case (L)	1
7	Rear cover (L)	1
8	Condensor cover	1
10	ISPM – IO cable (L)	1
11	ISPM	1
12	RS	1
14	I/O board	1
15	Capacitor board	1
16	PCB2	1

L100-007MFU

10-2. I/O board compatibility

L100 series V: available - : not available

NOTE:B32 function is available from “L” or after .

NOTE: The “A” is not available from the others revision.

NOTE: L100EULH ”F” is available from L100EUL "G","J","K","M","P" .

I/O board Name “Revision”	002NFE-022NFE 002NFU-022NFU 037LFU	004HFE-040HFE 004HFU-040HFU	002LFR-037LFR	004HFR-037HFR	055HFE,075HFE 055LFU,075LFU 055HFU,075HFU	055LFR075LFR 055HFR,075HFR
L100EUL "A"	V	-	-	-	-	-
L100EUL "B","C","G","H","K","M","P"	V	-	-	-	-	-
L100EULH "F"	-	V	-	-	-	-
L100EUL "G","J","K","M","P"	-	V	-	-	-	-
L100L "D","E" ,"G","J","K","M","P"	-	-	V	-	-	-
L100L "G","J","K","M","P"	-	-	-	V	-	-
L100075EUL "L","N","P"	-	-	-	-	V	-
L100075L "L","N","P"	-	-	-	-	-	V

10-3. O,OI terminal adjustment procedure

If you need fine adjustment with out F31 IN EX%S, IN EX%E function(DOP/DRW), or A group A13,A14 function (on standard panel), please refer to following procedure.

Meaning

set C91 "01" ; Debug on
set C94 "F947" ; O terminal adjustment constant
set C95 "xx" ; adjust this data
power off and wait Power lamp off and power on and check the freq. setting.

(set C91 "01" ; Debug on)
set C94 "F948" ; OI terminal adjustment constant
set C95 "xx" ; adjust this data
power off and wait Power lamp off and power on and check the freq. setting.

set C91 "00" ; Debug off

If the data was added, the freq. setting will be increased. (concept is as same as J100,J300)

10-4. kW setup procedure

To set up kW, we advise you not to use DOP/DRW !

	Meaning
set C91 "01"	; Debug on
set C94 "FAB0"	; kW adress
set C95 "xx"	; kW code
set B84 "01"	; to excecute FACTORY SETTING

Try FACTORY SETTING

Check B12' display (F-23 E-THM LVL)

B12's display table

kW	200V	400V
002	1.40	----
004	2.60	1.50
005,007	4.00	2.50
011,015	7.10	3.80
022	10.00	5.50
030,040	15.90	8.60
055	24.0	13.0
075	32.0	16.0

kW code table (common L100/SJ100)

xx	kW
01	002
02	004
03	005,007
04	011,015
05	022
06	030,040
07	055
08	075

In case of L100, SJ100, it automatically detects it's voltage class with hardware in the ISPM, voltage class setup is not necessary.

Call 1(800)985-6929 for Sales hitachiacdrive.com sales@hitachiacdrive.com

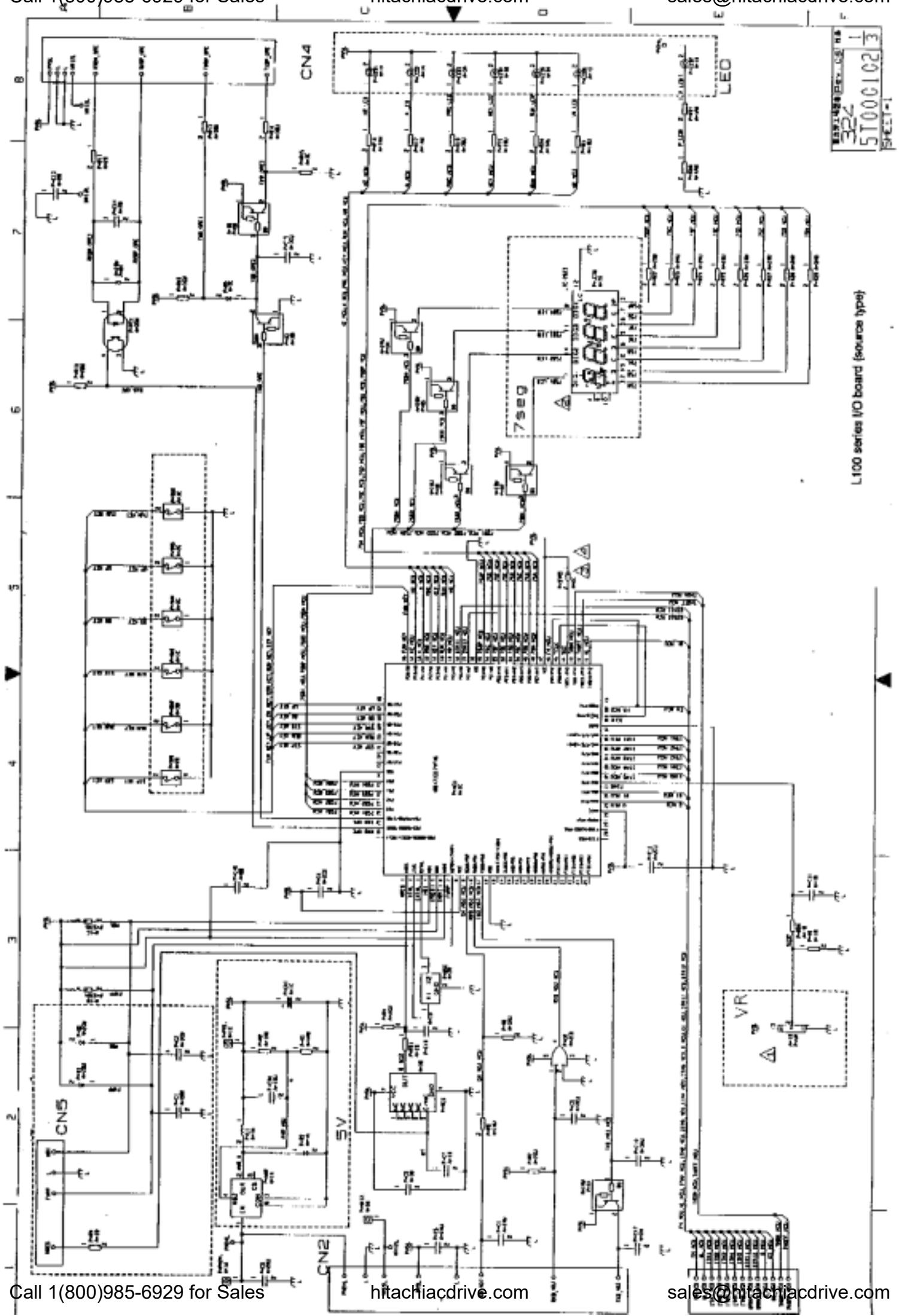

Call 1(800)985-6929 for Sales hitachiacdrive.com sales@hitachiacdrive.com

Call 1(800)985-6929 for Sales hitachiacdrive.com sales@hitachiacdrive.com

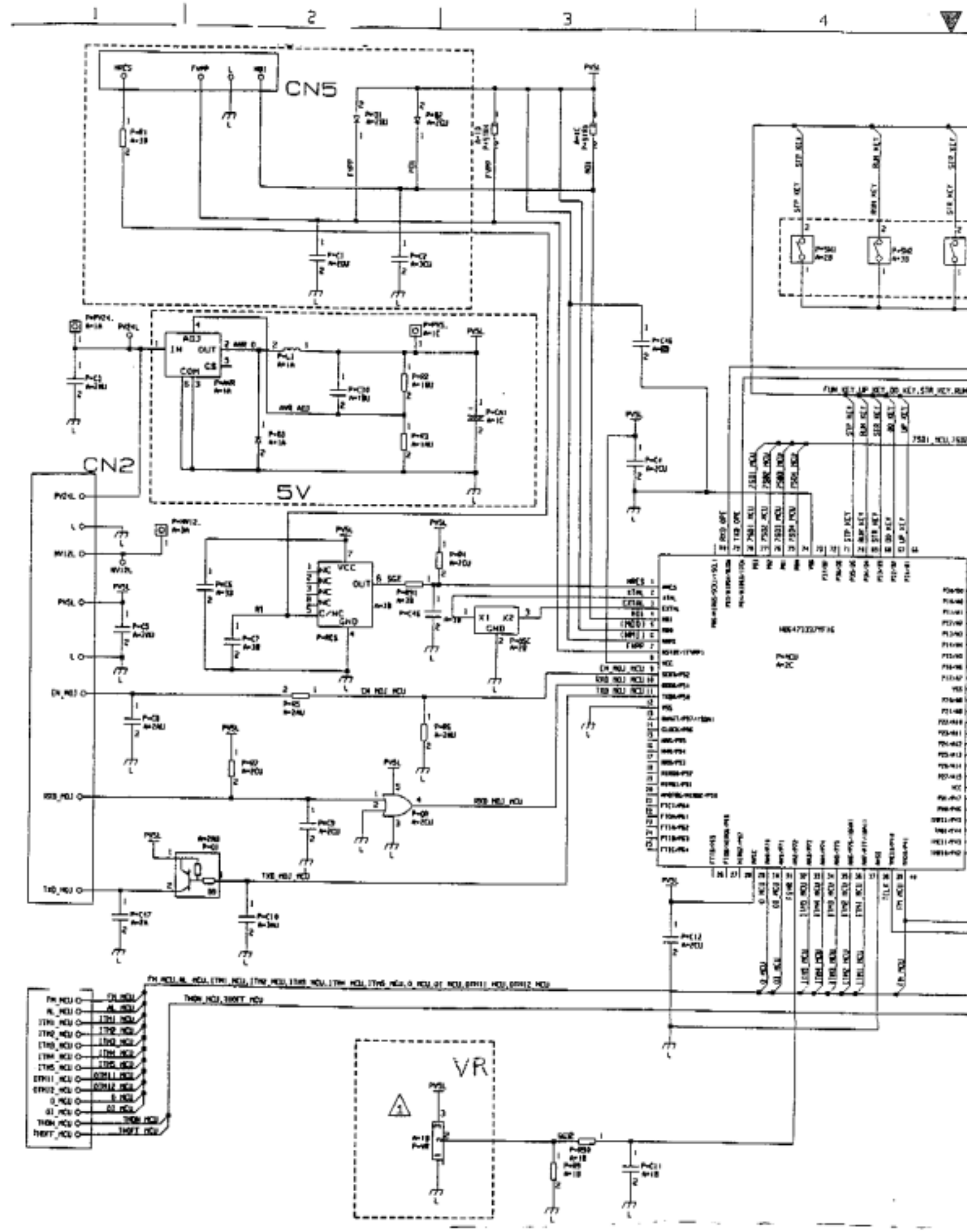

L100 series I/O board (source type)

Magnification

Call 1(800)985-6929 for Sales hitachiacdrive.com sales@hitachiacdrive.com

Call 1(800)985-6929 for Sales hitachiacdrive.com sales@hitachiacdrive.com

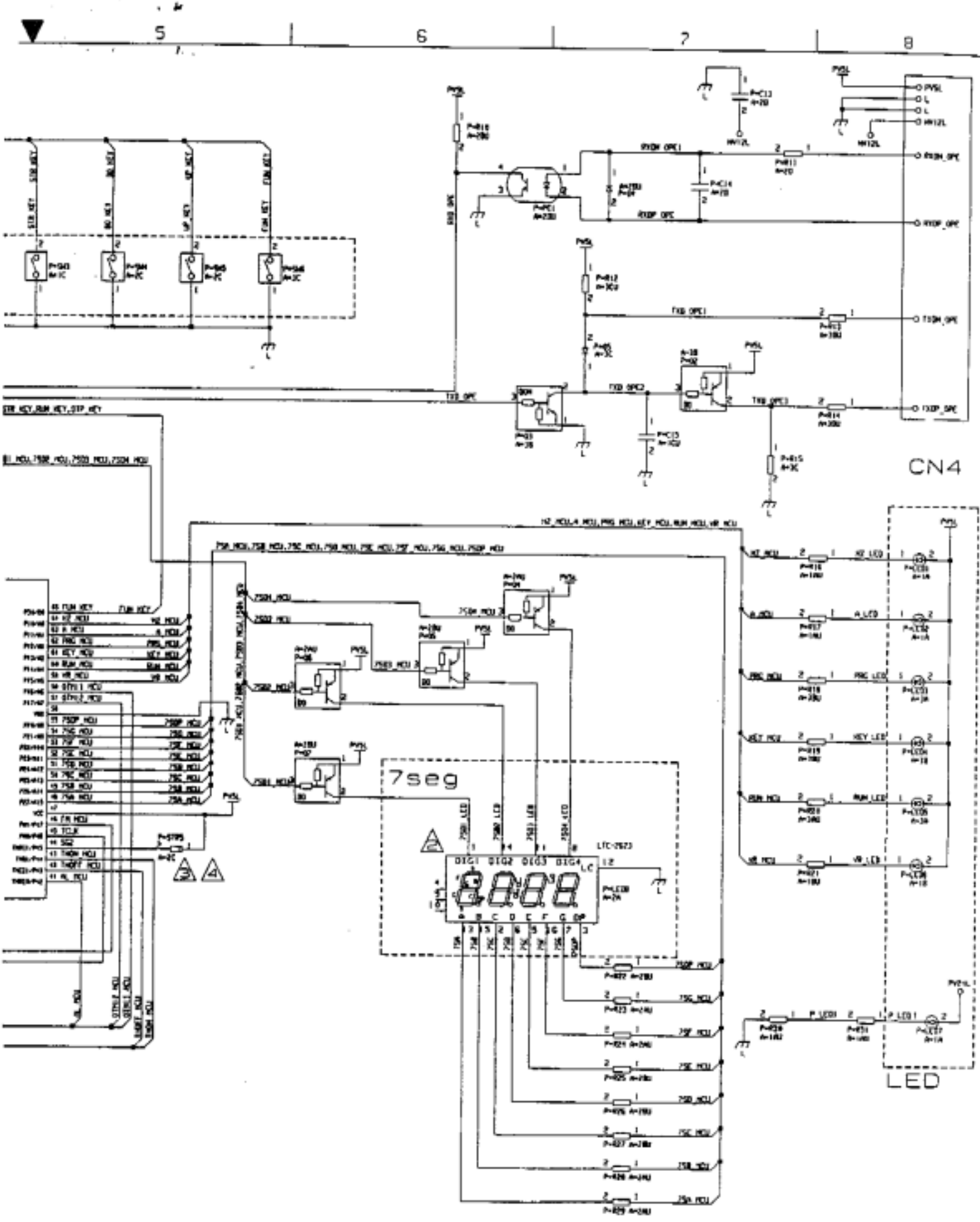

L100 series I/O board (source type)

Magnification

Call 1(800)985-6929 for Sales hitachiacdrive.com sales@hitachiacdrive.com

Call 1(800)985-6929 for Sales hitachiacdrive.com sales@hitachiacdrive.com

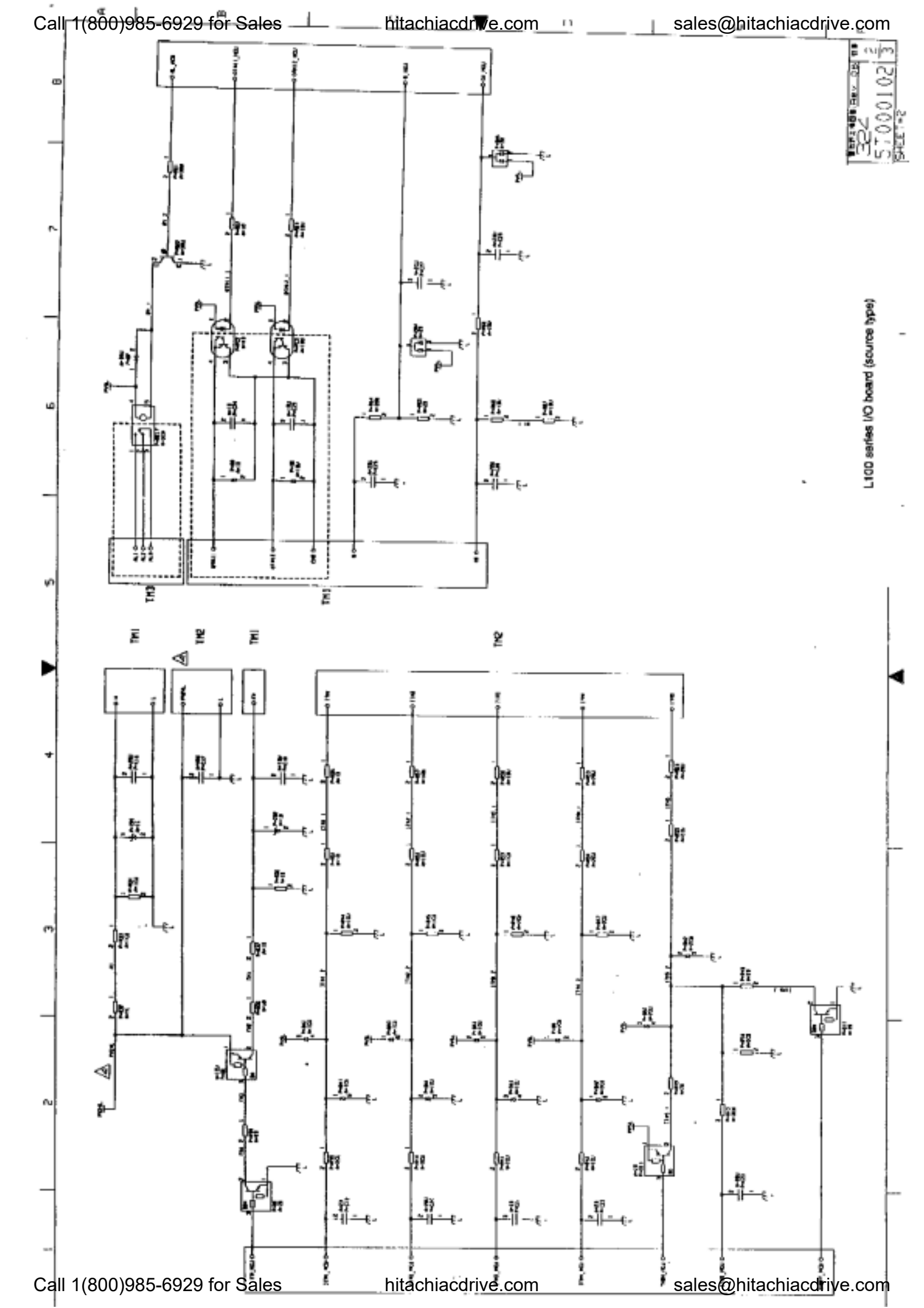

Call 1(800)985-6929 for Sales hitachiacdrive.com sales@hitachiacdrive.com

Call 1(800)985-6929 for Sales
hitachiacdrive.com
sales@hitachiacdrive.com

L100 series I/O board (source type)

Call 1(800)985-6929 for Sales
hitachiacdrive.com
sales@hitachiacdrive.com

Call 1(800)985-6929 for Sales hitachiacdrive.com sales@hitachiacdrive.com

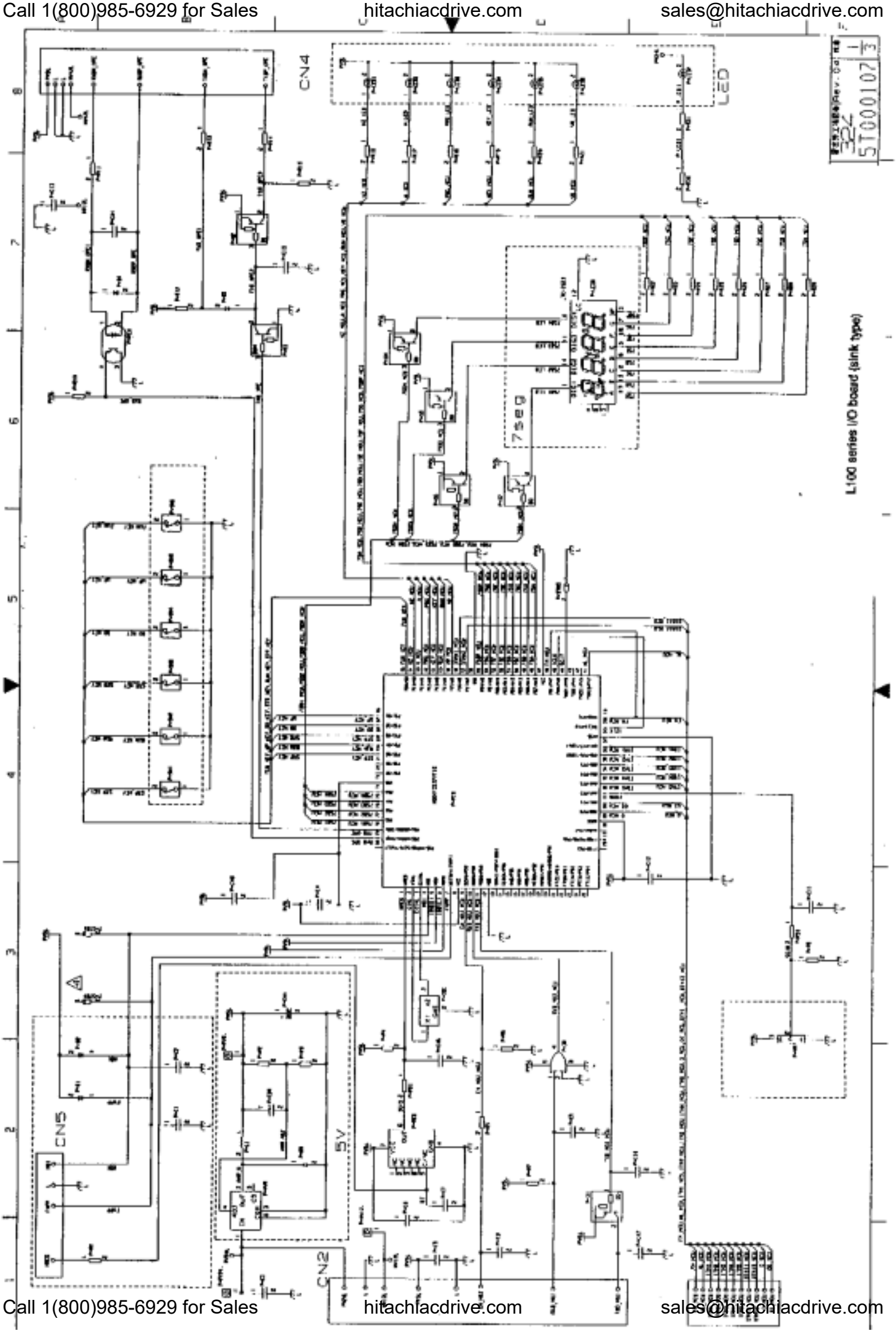

Call 1(800)985-6929 for Sales hitachiacdrive.com sales@hitachiacdrive.com

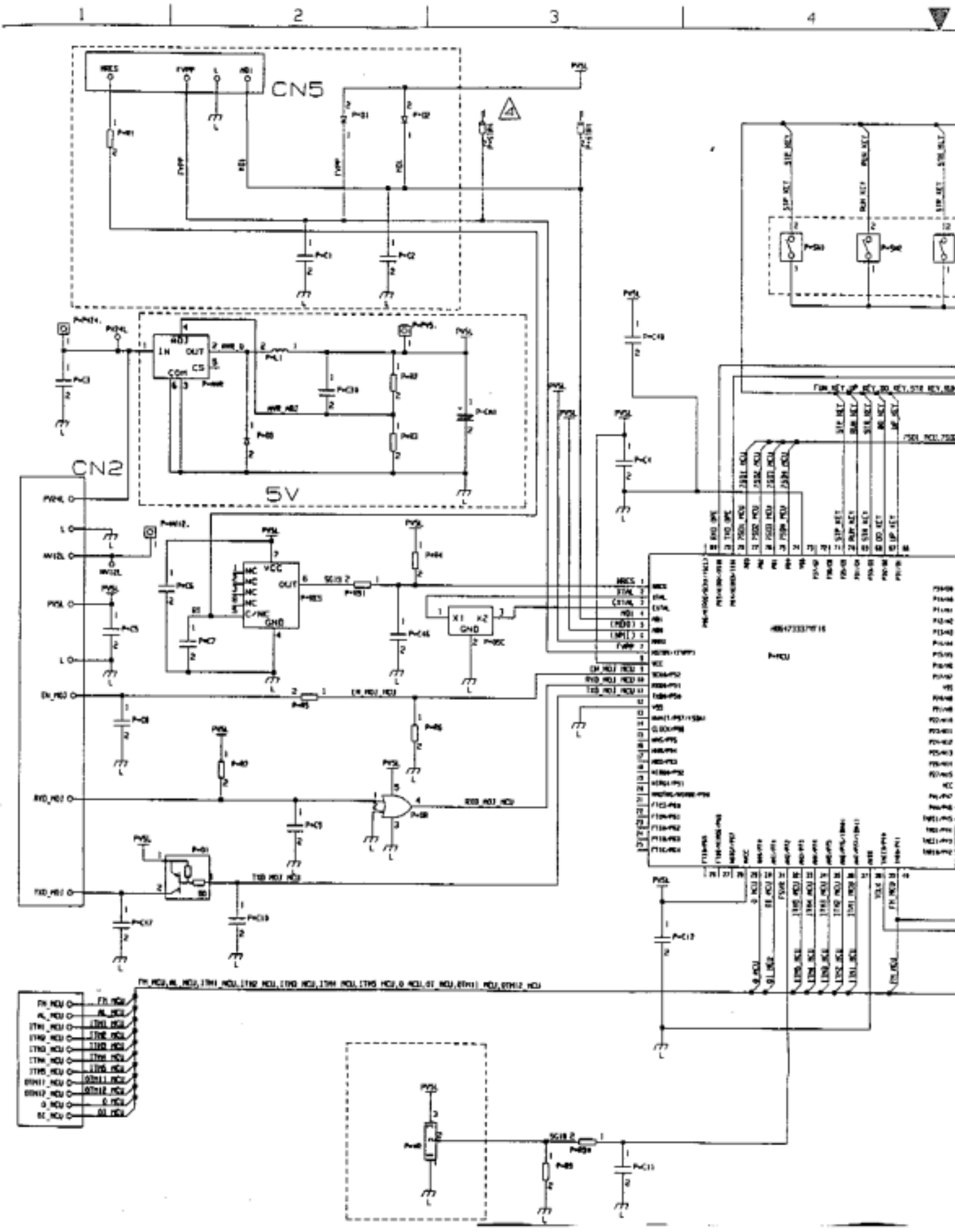

L100 series I/O board (sink type)

Magnification

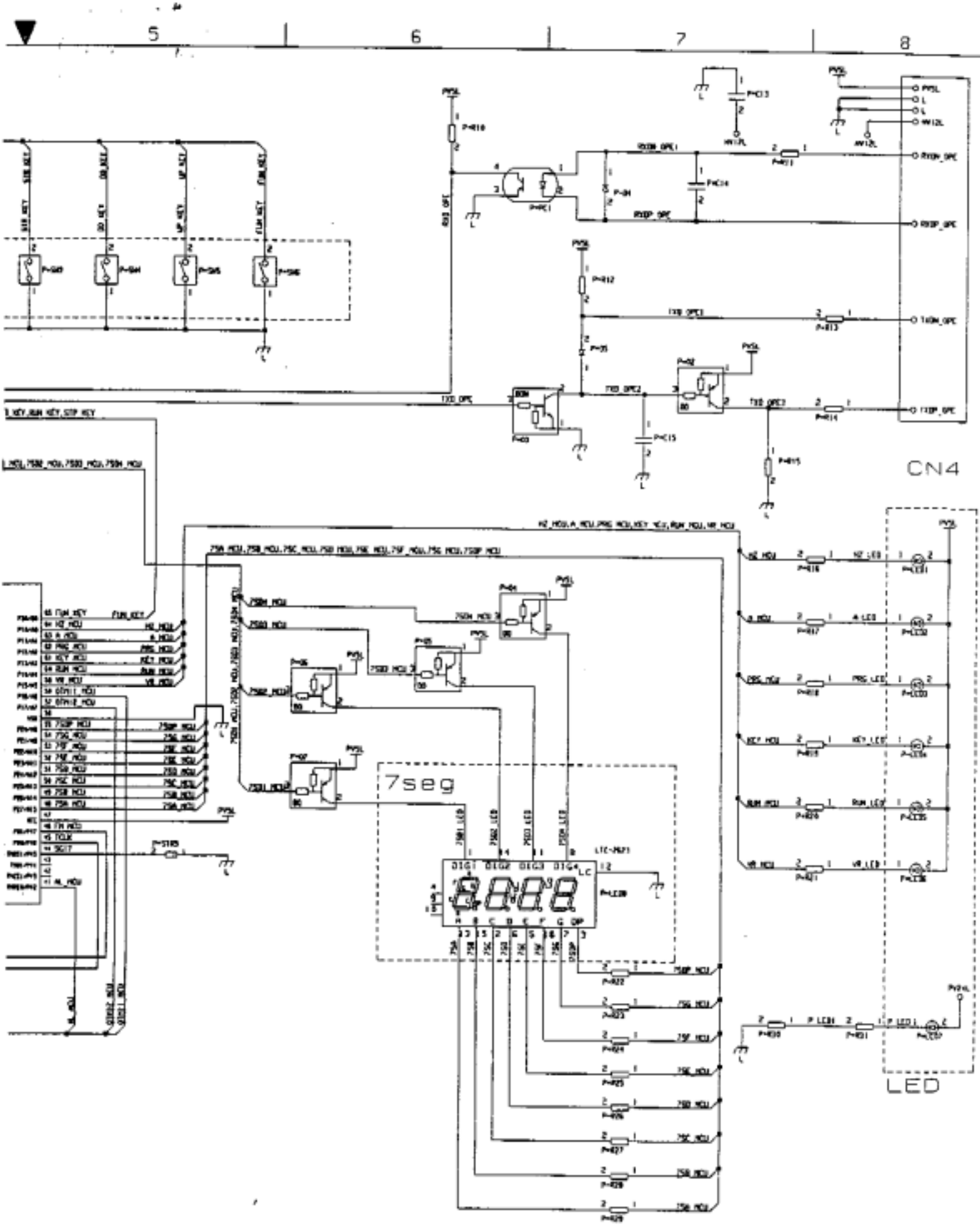

L100 series I/O board (sink type)

株式会社 日立製作所	富古野工場図書 Rev. 04 324 5T000107	1/3

Call 1(800)985-6929 for Sales hitachiacdrive.com sales@hitachiacdrive.com

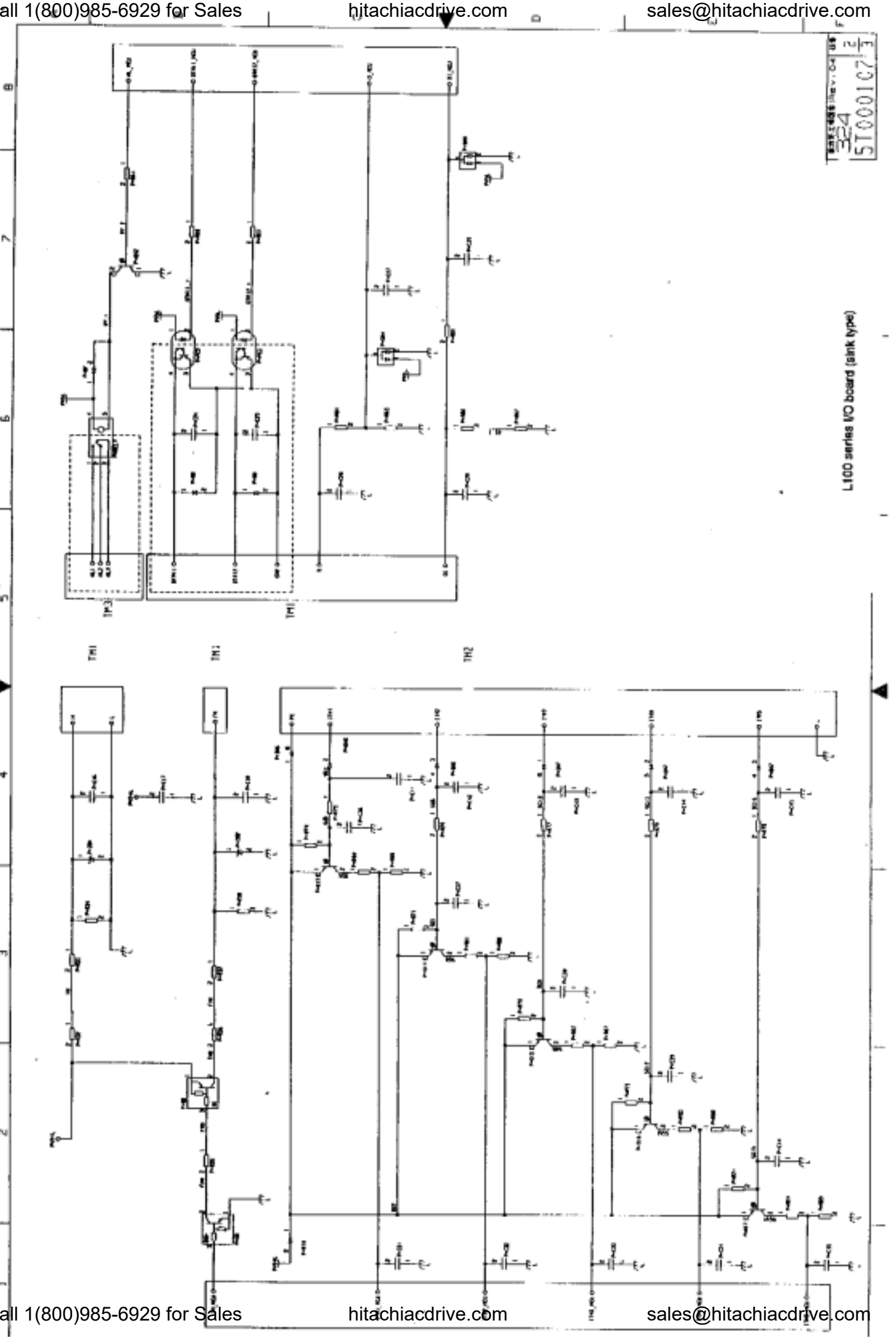

Call 1(800)985-6929 for Sales hitachiacdrive.com sales@hitachiacdrive.com

Call 1(800)985-6929 for Sales
hitachiacdrive.com
sales@hitachiacdrive.com

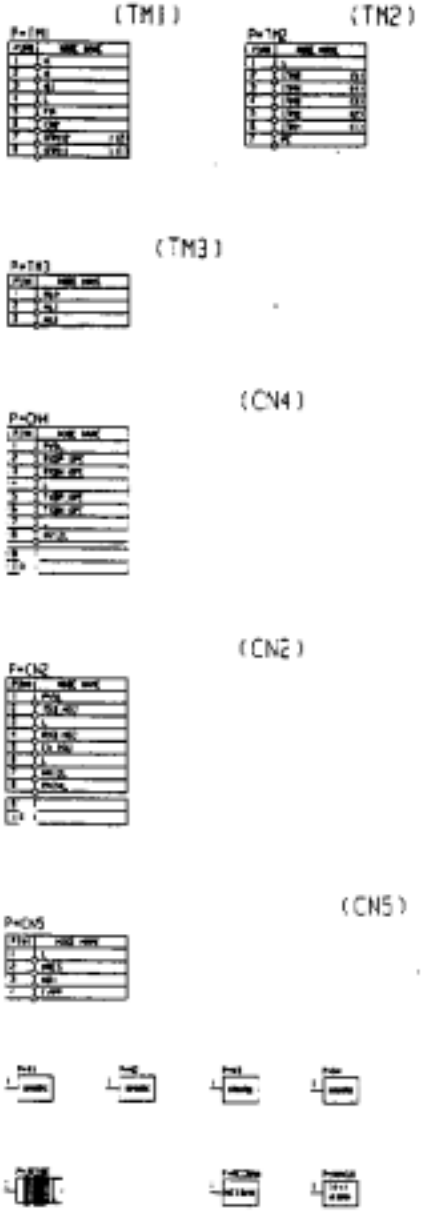

L100 series I/O board (sink type)

End of page